Installation and User Manual

for AC vector control frequency inverters ELDI / V

(Revision NEW)

Contents

1 Introduction

Transistorized frequency inverters series ELDI / V are intended to control the speed of standard 3-phase asynchronous and synchronous motors. They work on the principal of double conversion of electrical energy AC-DC-AC, by which the motor is supplied with controlled by frequency and amplitude 3-phase voltage. The frequency inverters are realized by using up-to-date electronic basis with high level of integration, power intelligent IGBT modules in the power part and high-productivity specialized DSP in the control part. They have possibility for parameters' adjustment of the inverter depending on the type and parameters of the controlled motor and on the specific requirements to the mechanical device, which will be driven.

The speed control of the motor becomes by regulation of the output voltage, as well as by output frequency regulation.

The inverters' range is developed for the following voltages and powers of the electrical motor:

- 200 - 230V 1 ~ 50/60Hz – for motors with power 0,55kW to 2,2кW
- 380 - 400V 3 ~ 50/60Hz – for motors with power 0,55kW to 75кW

1.1 Disclaimer

ELECTROINVENT delivers optimized and tested equipment like Inverters and string boxes for Solar Power Plants. The correct integration and interconnection of the equipment according to the manuals and datasheets from ELECTROINVENT is the responsibility of the System Integrator. ELECTROINVENT does not assume any liability for system design, dimensioning, build-up and the performance of the system. Claims because of downtime are excluded.

The contents of the written text are reviewed for compliance with the hardware and software described below. However, inaccuracies cannot be excluded, thus preventing us from supplying a full warranty for full compliance. The data supplied in the current manual is reviewed regularly. Corrections are included in subsequent editions.
In case of violation of the installation instructions warranty claims will not be accepted.
We discard any liability in cases of accidents and material damage, caused by inappropriate handling, undertaking of works by unauthorized personnel and the resulting damages on persons and device, as well as for any resulting subsequent damages.

1.2 IMPORTANT SAFETY INSTRUCTIONS

READ AND SAVE THESE INSTRUCTIONS!

This manual contains important safety and operating instructions for ELDI / V inverter. Keep it with or near the inverter at all times.

AC vector control frequency inverters operate with lethal voltages and the work described here should only be performed by authorized personnel familiar with the installation, mounting, commissioning, and the operation of AC vector control inverters. This manual must be fully read and understood before installing or commissioning is performed. The ELDI / V product must only be used for its intended purpose and unauthorized personnel are not allowed to open the ELDI / V product. The faultless and safe operation of the product assumes appropriate transport, correct storage, installation and mounting as well as correct operation and maintenance. The relevant regional and country-specific regulations and instructions must be obeyed as well as requirements described in this document including placement and installation instructions (e.g. connection profiles, torque settings, etc.)

Symbols and warning signs used:

WARNING

WARNING indicates a hazardous situation which, if not avoided, could result in death or serious injury.

ATTENTION

ATTENTION refers to address practices not related to personal injury. Failure to observe could lead to property damage.

1.3 Check for damages

Check the drive for eventual damage during transportation. If it has damaged or non-corresponding parts, please inform the producer – “Electroinvent” Ltd or the distributor, from whom you have purchased the product.

1.4 Completeness by delivery of frequency inverters ELDI/V

Q-ty:	*Article:*
1 pc.	Frequency inverter ELDI / V
1 pc.	Connector type CTF1600T, 16 pins - (CN2)
1 pc.	Connector type CTF0800T, 8 pins - (CN3) / or type HD-15 FM, 15 pins (CN3D)
1 pc.	Installation and user manual

1.5 Checking the type, label and serial number of the product

Check if the type of the product, written on the lable, corresponds to model you have ordered.

- **Label of the product**

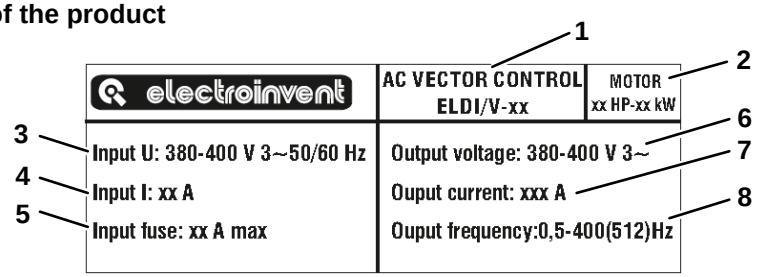

Figure 1.1. Label of the product

1. Product's mod;
2. Motor power;
3. Input voltage;
4. Nominal input current;
5. Maximal allowed current;
6. Output voltage;
7. Nominal output current;
8. Output frequency;

- **Serial number**

The series number of the product is unique and serves for identification and follow-up of the concrete product by its production, programming, parameter setting, purchase and service.

It consists of year of production and series number.

Example: **Serial No151027 -** 20**15**г., series number **1027**.

2 Warnings and Notes

WARNING

The local installation standards must be obeyed.

WARNING

The device must only be installed, operated and maintained by qualified personnel.

WARNING

The device carries lethal grid voltages. Consider a capacitor discharge time of **10 minutes**, before starting assembly or disassembly the power output terminals.

WARNING

Consider all safety instructions displayed on the inverter and in the installation and user manual!

WARNING

ATTENTION!

Danger from burning! Heatsink can be hot!

WARNING

If any information is unclear, please refer to ELECTROINVENT.

ATTENTION

Loss of warranty.

The frequency inverter must not be damaged and no holes are allowed to be drilled in the cabinet. Any transport damage must be reported to ELECTROINVENT.

3 General description of the product

3.1 Main technical parameters of frequency inverters - type ELDI / V

*Table 3.1. Technical parameters of **ELDI / V-A** and **ELDI / V-B***

Type / Dim.		ELDI / V-A					ELDI / V-B							
Motor power	kW	0,55	0,75	1,1	1,5	2,2	0,55	0,75	1,1	1,5	2,2	3,0	4,0	5,5
Input voltage	V_{AC}	200 ÷ 230 V1~ ± 10%					380 ÷ 400 V3~ ± 10%							
Frequency of U_{IN}	Hz	50 / 60 ± 5%												
Input current	A	5,3	7,6	10,2	13,5	18	2,1	2,9	4,2	5,1	6,5	9,2	12,5	16,0
Output voltage	V_{AC}	3 x 0 ÷ Usupp.												
Output frequency	Hz	0,1 ÷ 400 (by customer's request - 512)												
Output current	A	3,0	4,3	5,9	7,1	9,5	2,0	2,3	3,2	4,2	6,0	7,6	10,2	11,2
Max.current (60s.)	A	150% I_H once at 10 minutes												
Dissipated power	W	48	55	65	85	110	40	52	80	110	135	155	180	180
Pulse current by dynamic braking	A	6								8		10		
Cooling type		Natural (convection)			Forced (fan)		Natural (convection)				Forced (fan)			

*Table 3.2. Technical parameters of **ELDI / V-DF** and **ELDI / V-D***

Type / Dim.		ELDI / V-DF		ELDI / DF							
Motor power	kW	7,5	11	15	18,5	22	30	37	45	55	75
Input voltage	V_{AC}	380 V3~ ± 10%									
Frequency of U_{IN}	Hz	50 / 60 ± 5%									
Input current	A	21,5	32	43	53	62	82	94	112	125	175
Output voltage	V_{AC}	3 x 0 ÷ Usupp.									
Output frequency	Hz	0,1 ÷ 400 (by customer's request - 512)									
Output current	A	16	22	29	36	42	62	72	85	105	138
Max.current (60s.)	A	150% I_H		140% I_H				130% I_H		120% I_H	
Dissipated power	W	270	450	550	680	720	840	920	1100	1300	1500
Pulse current by dynamic braking	A	20		30				40		60	100
Cooling type		Forced (fan)									

3.2 Operation conditions

The operation conditions of frequency inverters are described in *Table 3.3.*

Table 3.3. Operation conditions

Parameters:	***Condition:***
Degree of protection	IP20
Operating temperature	from +5°C to +45°C
Air humidity	maximum 80% at 30°C (without condensation)
Altitude	up to 2000m
Overvoltage category	III
Pollution degree (for environment)	2
Protection class against electrical current injuries	I
Type of electrical supply system	TN
Environment	explosion proof, without current conducting parts, gases and vapours in concentration with destructive influence

ATTENTION

Nominal output power is decreased with 1% at each 100m at installations in environment above 1000m.

ATTENTION

If the surrounding temperature of the AC drive is above 45°C, install it better at ventilated place, without obstruction of the air flow of cooling fan.

ATTENTION

To increase the reliability, the inverter has to be installed at place, protected from high temperature. If the inverter is installed in a cabinet, use cooling fan or air conditioner, with aim to keep surrounding temperature not higher than 45°C.

ATTENTION

Pay attention to vibrations and check if they influence to electrical devices in the cabinet.

ATTENTION

Inverter and motor radiate heating. It is necessary to secure enough distance between inverter and other devices in the cabinet, the heat to be dissipated.

Observe the following rules when choose the place for installation:

- Don't install inverter near heat-radiating elements or directly to sun shine;
- Don't install at place, exposed to corrosive gases, liquids, dust in the air or metal micro parts;
- Don't install at places, where the temperature and humidity exceed the specified;
- Don't install inverter at places, where it will be exposed at high level of electromagnetic radiation.

ATTENTION

If you don't observe these requirements, you can lose your guarantee!

3.3 Transport and storage

The conditions for transport and storage are describe below:

- Environment temperature: -20°C to +65°C
- Air humidity: from 0% to 90% (without condensation of moisture)
- The inverters to be not submitted to influence of shocks, vibrations, UV radiation, etc.
- The inverters to be stored in dry and clean premises, without direct sun shine
- The inverters to be stored in premises without presence of corrosive gases and liquids, packed well and placed on solid surface
- The inverters to be stored in transport packing before their installation.

To keep the guarantee, the inverters must be stored correctly.

3.4 Order code

Table 3.4. Order code of frequency inverters ELDI / V

ELDI/V	-	X(X)	-	X	X		-	XX.X		-	X	
Series	-	***Version***	-	***Power supply***			-	***Motor power in kW***		-	***Feedback***	
				Number of phases	***Voltage***							
ELDI/V		**A**		**1**	**2**	*230V*		**00.5**	*0.5kW*		**O**	Open (без)
		B		**3**	**4**	*400V*		**00.7**	*0.7kW*		**E**	Encoder
		DF						**…**	*…*		**D**	enDat
		D						**75.0**	*75kW*		**S**	SSI

Example:
ELDI/V-B-34-02.2-E is the code of inverter with vector control, version B, 3-phase supply 380-400V, for motors up to 2,2kW and feedback from standard encoder.

4 Mechanical installation

4.1 Common requirements during installation

By installation of frequency inverters must be observed the following requirements:

- By installation unpack carefully and take out the inverter from the packing.
- Install the frequency inverters ELDI / V in the electrical cabinet.
- Install the inverter on mounting surface with enough strength and rigidness.
- Install the inverter on uninflammable surface.
- Install the inverter with suitable fixing elements, using instruments, guaranteeing the needed force for mechanical fixing.
- Install the inverter in this way, that the acces to it to be guaranteed during operation, adjustment and maintenance.
- Don’t bend and strain connecting cables between inverter and motor.
- Frequency inverters ELDI/V are intended to work with electrical motors, in conformity with requirements of IEC60034-1.
- Sensors mounted on the motors and connected to frequency inverters must have secured during installation double and/or strengthened insulation between them and current conducting parts of the motor, as well as additional insulation between them and the accessible current conducting parts of the motor. The insulations must secure operation of the for working voltage 400VAC.
- If the length of the cable between inverter and motor is more than 20m, increase the cross section of power cable, connecting motor and inverter, as well as the cable for connecting the encoder.
- Check if the motor fixing screws are tightened well.

4.2 Minimal distances and cooling

ATTENTION

Incorrect installation can cause prematurely damage of inverter. Follow instructions of this manual during installation of the inverter.

- The inverter must be istalled perpendicularly to the wall of the cabinet or to the control panel.
- To secure good ventilation, check if all ventilation outlets are free and if there is enough space around them.
- Don't mount the inverter in horizontal position, because it will make worse cooling and can bring to damage (*Figure 4.1*).

Figure 4.1. Mounting the inverter

- The inverter must be mounted vertically with its back to the wall, on dry and hard surface.
- To be left minimum 100mm distance above and bellow it to secure ventilation and heat dissipation.
- Install a fan to avoid ambient temperatures, higher than specified.
- When you install two and more inverters, keep the minimal distancies between them (*Figure 4.2*).

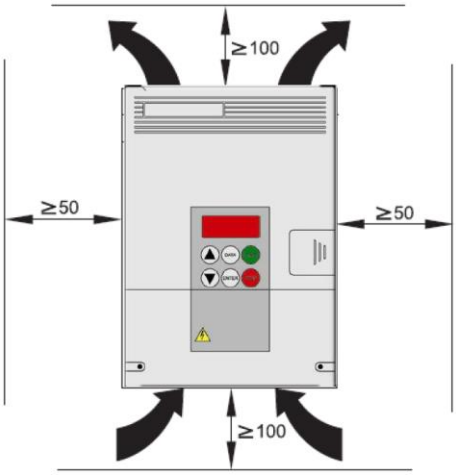

Figure 4.2. Minimal distances

4.3 Overall and mounting dimensions

The overall and mounting dimensions of the inverter are shown on *Figure 4.3* and *Table 4.1*.

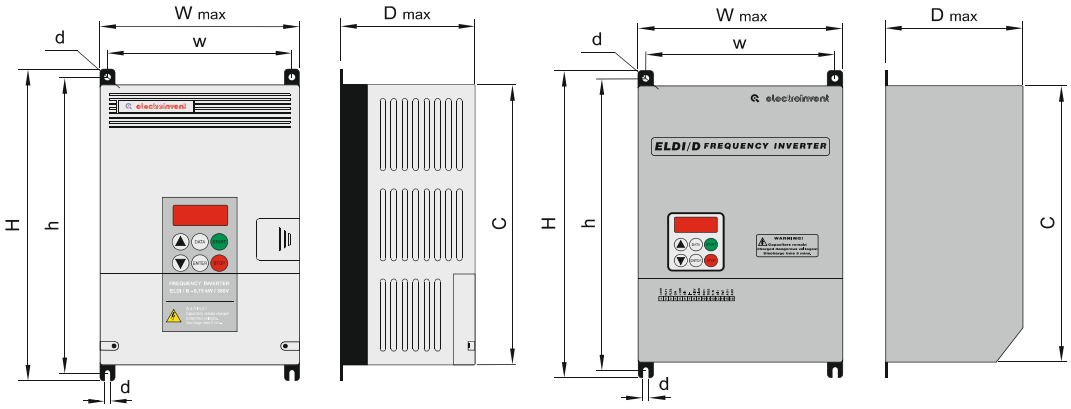

Figure 4.3. Overall and mounting dimensions

Table 4.1. Overall and mounting dimensions

Type, kW	*H, mm*	*Wmax, mm*	*Dmax, mm*	*C, mm*	*h, mm*	*w, mm*	*d, mm*	*Weight, kg*
ELDI / V-A 0,55 - 0,75	210	128	92	180	195	105	6	1,800
ELDI / V-A 1,1 - 2,2	210	128	140	180	195	105	6	2,150
ELDI / V-B 0,55 – 1,1	210	128	92	180	195	105	6	1,800
ELDI / V-B 1,5 – 2,2	210	128	140	215	195	105	6	2,150
ELDI / V-B 3,0	245	128	140	215	230	105	6	2,650
ELDI / V-B 4,0 – 5,5	280	128	140	250	265	105	6	3,050
ELDI / V-DF 7,5 –11,0	340	180	185	300	320	140	7	7,350
ELDI / V-D 15,0	310	215	175	280	195	180	7	8,800
ELDI / V-D 18,5 – 22,0	410	275	250	370	390	235	9	17,550
ELDI / V-D 30,0	410	275	250	370	390	235	9	19,000
ELDI / V-D 37,0	655	315	270	575	620	260	13	32,100
ELDI / V-D 45,0	655	315	270	575	620	260	13	36,600
ELDI / V-D 55,0 – 75,0	655	315	270	575	620	260	13	39,400

5 Connection of power terminals

5.1 Connection of external devices to power terminals

The connecting sequence of most used external devices to power terminals of the inverter is shown on *Figure 5.1*.

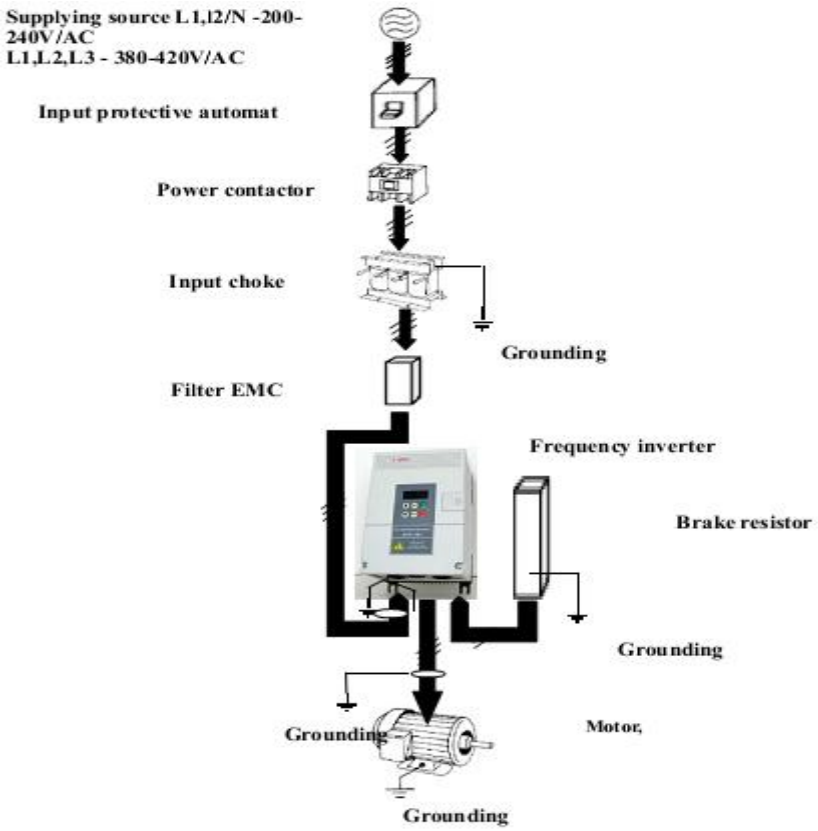

Figure 5.1. Connecting sequence of external devices to power terminals of the inverter

5.2 Protective grounding of the inverter

ATTENTION

Protective grounding is used to lead away the leakage current from inverter's corpus to ground.

Observe the following requirements by connecting the protective grounding of the inverter:

- Always use terminal ⏚ for grounding of inverter;
- The grounding to be with resistance less than 100 Ω for net 200VAC and less than 10 Ω for net 380 - 420VAC;
- Don't ground the inverter to grounding terminals of other aggregates or power equipment;
- Use grounding conductor according to standard and with possible shorter length;
- When you use several inverters, pay special attention about connecting of grounding conductor. It is not allowed to form closed loop (*Figure 5.2*);

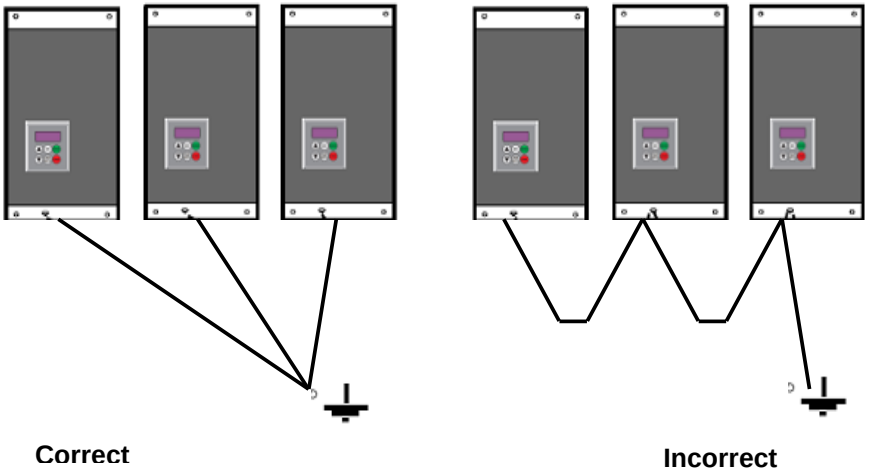

Figure 5.2. Connecting of grounding conductor

- Between the output terminals of the inverter and the motor there must must not have any commutation apparatuses - contactor, circuit braker, relay and others!
- Do not connect the power supply to output terminals U, V, W !
- The inverters are designed for 3-phase asynchronous motors connected in a scheme where there is correspondence between the supply voltage of the motor and output voltage of the inverter!
- Do not connect the neutral phase to the output terminals U, V, W !

The connecting of the power terminals of series **ELDI / V** are shown on *Figure 5.3.*

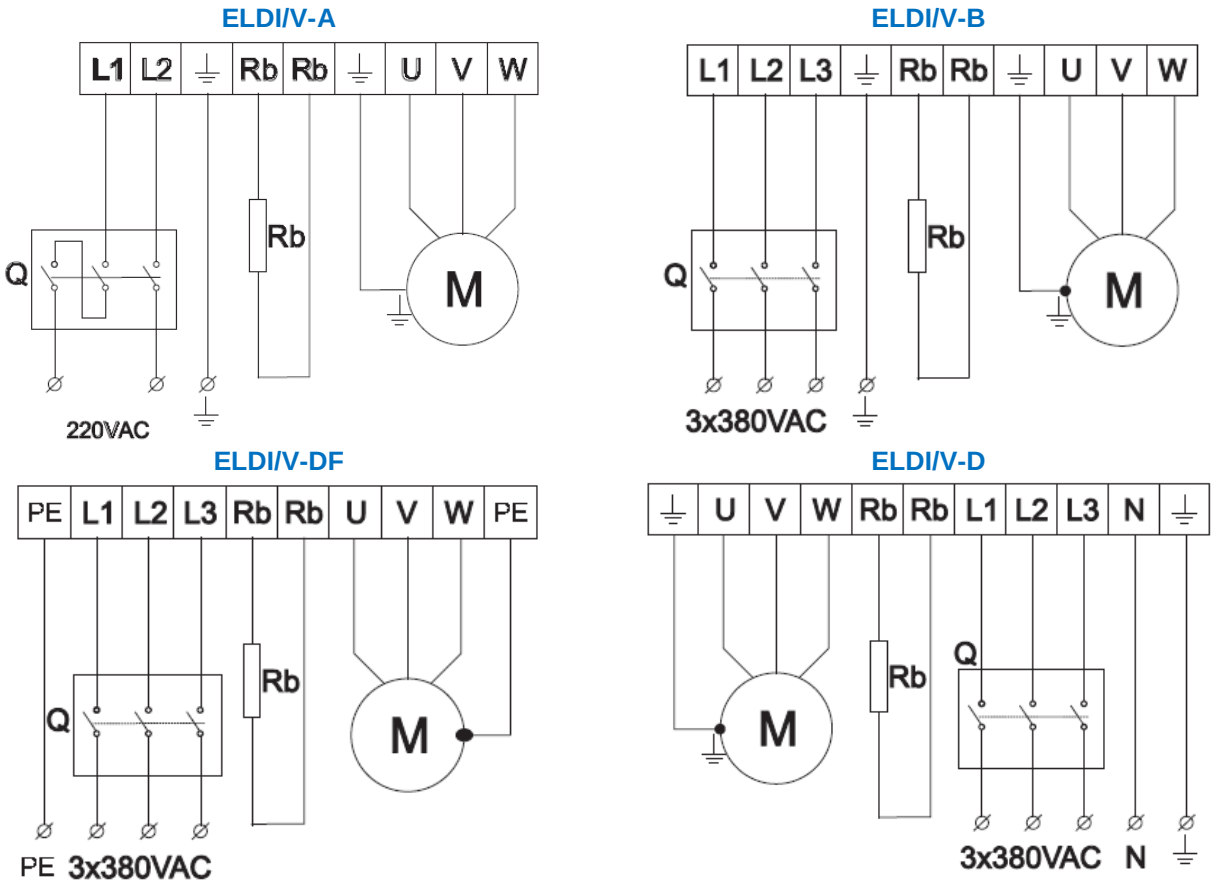

Figure 5.3. Connecting the power terminals of series ELDI / V

5.3 Description of power terminals

In *Table 5.1.* are shown the description of power terminals of frequency inverters.

Table 5.1. Description of power terminals

Symbol:	*Explanation:*	*Function:*
L1, L2, L3	**Mains supply**	About inverter's supply from electrical net. By 1-phase supply, connect L1 and L2(N) (200-240VAC). By 3-phase supply, connect L1, L2 and L3 (380-400 VAC).
	**Functional grounding**	It is used for functional grounding of inverter to grounding bolt of the electrical cabinet or to protective loop of building installation.
	**Protective grounding**	About protective grounding of inverter's corpus.
U, V, W	**Motor supply**	About connection between inverter and motor.
Rb, Rb	**External resistor**	About connection of external brake resistor.

For trouble-free operation of the frequency inverter it is necessary to observe the following requirements about wiring of power terminals:

- All used connectors are executed in accordance with requirements for protective split.
- The connecting terminals of inverter are not intended for disconnection under load.
- Check about correct connection of power net supply (L1, L2, L3).
- Check about correct connection of protective grounding of inverter with grounding bolt of the cabinet or to protective loop of building installation.
- Check about correct connection of the motor to connector (U, V, W).
- Check about correct connection of protective grounding of the motor to grounding bolt of the drive.
- Pay attention during installation, operation and maintenance, that power terminals of power circuits appear parts under dangerous voltage and additional measures must be taken for trouble-free operation with them or very close operation to them.

DANGER

After switch-off of power voltage, it is necessary to wait minimum **10 minutes** before starting assembling or disassembling of power input and output connectors/terminals. The time is needed to discharge the capacitor battery in power unit.

- Power cables (L1, L2, L3, U, V, W) to be placed in cable duct separately from signal cables of input output interface and encoder.
- Use connecting cables with cross sections shown in *Table 5.2.* and *Table 5.3.*
- Use cables with double insulation only, conformable with operating voltages of the system (for example type HOSVV-F or type HO5RR-F).
- For connections about protective grounding use only yellow/green cables with double insulation, conformable with operating voltages of the system (for example type HOSVV-F or type HO5RR-F).
- The temperature contact sensors built in the motor can be connected to the programmable digital input of frequency inverter, which will switch-off the inverter, when thermo-protection of the motor is switched-on.
- Special protective measures are taken regarding accessible circuits for control, working at trouble free over-low voltage (SELV). These measures include protective splitting of all control circuits from the power high voltage circuits by means of double and strengthened insulation, calculated for over-voltage category III and maximal operating voltages 400V or 230V in the units.
- It is necessary the protective splitting to be preserved during installation, operation and maintenance by means of suitable splitting of power and control circuits , using cables and connectors with appropriate double and strengthened insulation and observing the specified climatic and thermal requirements.

ATTENTION

- Don’t connect power supply to output terminals U, V, W!
- Don’t connect “neutral (0)” to output terminals U, V, W!
- Never use capacitor as filter against disturbances, connected to output terminals U, V, W! The high output frequency can overheat it, to destroy the capacitor or inverter to destroy itselve.

5.4 Cross-section of cables for connection to power terminals

When performing wiring diagrams of the power terminal must to meet the requirements for the section of the connecting cables shown in *Table 5.2.* and *Table 5.3.*

Table 5.2. Cross-section of cables for power terminals

Type	***ELDI / V-A***			***ELDI / V-B***							
Power [P], kW	**0,55 0,75**	**1,1 1,5**	**2,2**	**0,55**	**0,75**	**1,1**	**1,5**	**2,2**	**3,0**	**4,0**	**5,5**
Input - L1, L2, L3, mm²	1	1,5	2,5	0,75	1	1	1,5	1,5	2,5	2,5	4
Functional grounding ⏚, mm²	1	1,5	2,5	0,75	1	1	1,5	1,5	2,5	2,5	4
Protective grounding ⏚, mm²	1	1	2,5	0,75	1	1	1,5	1,5	2,5	2,5	4
Output connecting the motor - U, V, W, mm²	1	1,5	2,5	0,75	1	1	1,5	1,5	2,5	2,5	4
Protective grounding of the motor, mm²	1	1,5	2,5	0,75	1	1	1,5	1,5	2,5	2,5	4

Table 5.3. Cross-section of cables for power terminals

Type	***ELDI / V-DF***		***ELDI / V-D***							
Power [P], kW	**7,5**	**11,0**	**15,0**	**18,5**	**22,0**	**30,0**	**37,0**	**45,0**	**55,0**	**75,0**
Input - L1, L2, L3, mm²	4	6	6	10	16	25	25	35	35	50
Functional grounding ⏚, mm²	4	6	6	10	16	25	25	35	35	50
Operating neutral [N], mm²	-	-	-	1,5	1,5	1,5	1,5	1,5	1,5	1,5
Functional grounding ⏚, mm²	4	6	6	10	16	25	25	35	35	50
Connecting the motor - U, V, W, mm²	4	6	6	10	16	25	25	35	35	50
Protective grounding of the motor, mm²	4	6	6	10	16	25	25	35	35	50
Short circuit current of input automat type „C", A	-	-	63	63	100	100	125	125	150	200

ATTENTION

The scheme is for 5-conductors supply grid (3P+PE+N).
If the supply grid is 4-conductors scheme (3P+ PE /protective grounding), please refer for information to producer.

5.5 Installation of defect current protection

Output voltage U, V and W supplying the motor is PWM modulated with high frequency. It causes high frequency leakage to the corpus, which can be dangerous to the personel. This is the reason the inverter corpus to be through automat for protection from leakages.

Note: When you use special automat for protection from leakage – choose with current sensibility minimum 30mA per inverter.

When you use ordinary automat for protection from leakage – choose with current sensibility 200mA per inverter and reaction time 0,1s.

5.6 Installation of starting contactor

Starting contactor for power supply L1, L2, L3 is mounted, when there is requirement for remote switch-off of inverter from the supplying grid by emergency cases.

- The inverter can be switche-on and switched-off from contactor by specified adjustments.
- Secondery starting of the inverter through contactor, switching-on the power supply, must be done when the motor is stopped. If this requirement is not fulfilled, it is possible to cause damage in it. In this case it is necessary to increase the waiting time by switching-on through parameter **n.05 “Timer for prohibition secondary starting “.**
- Always use RC-groups or diodes to extinguish the reactive energy in starting contactor coils, relays, magnet switches and similar equipment, being inductive loads, when they are mounted near inverter.
- Don’t use contactor for switch-on and switch-off the motor to output terminals U,V,W of the inverter during operation. If contactor switches-on the motor, when the inverter is activated (it has output frequency and voltage), the overload protection can be activated or the motor can be destroyed.
- When it is necessary to use contactor for switching-off the motor from output terminals U,V, W, it must be done when inverter is stopped – there is no voltage at the output terminals.
- It should be known, that by switch-off of starting contactor, the motor will stop by inertia.

5.7 Installation of input three-phase coke

For inverters with power 15kW to 75kW, with aim to protect the supplying grid from entering of high frequency harmonics and to decrease them, it is necessary to use input 3-phase choke. It improves the operation of the rectifying unit and prolongs the life of electrolytic capacitors in the inverter. Overall and fixing dimensions of input chokes, used for inverters ELDI/V-D 15- 75kW, are shown in attached *Table 5.4*:

Table 5.4. Overall and mounting dimensions of input coke

Type	Rated current, A	Rated power, kW	Induction, mH	A, mm	B, mm	H, mm	a, mm	b, mm	Weight, kg
PK 02612	60	15 - 18,5	0,2	180	125	190	140	82	8
PK 02715	75	22 - 30	0,2	180	125	190	140	82	8
PK 021320	130	37	0,2	250	180	170	180	82	8,6
PK 021632	160	45 - 55	0,2	250	200	170	180	82	8,9
PK 022550	250	75	0,2	270	212	180	180	82	9,5

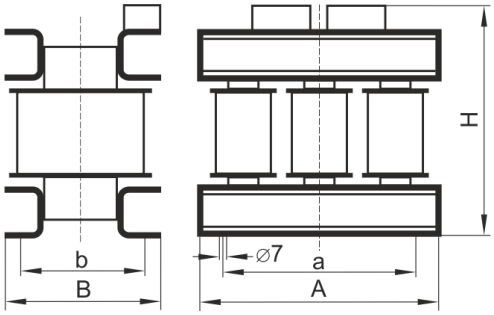

Figure 5.4. Overall and mounting dimensions of three-phase coke

5.8 Connection of brake resistor

Brake resistor is used to extinguish the breaking energy during fast stop or revers of the motor, when it drives mechanism with big inertion mass. The recommended values of resistor and its power are given in *Table 5.5.*

Table 5.5. Recommended values

Type	ELDI / V-A		ELDI / V-B, ELDI / V-DF					ELDI / V-D					
Power of inverter, kW	0,55-1,1	1,5-2,2	0,55-1,5	2,2-4,0	5,5 - 7,5	11	15	18,5	22	37	45	55	75
Brake resistor, Ω	100	50	100	100	70	50	30	30	30	25	20	20	15
Power of resistor, W	80 - 100	100	150	250	350	550	400	450	450	1020	1200	1400	2500
Moment power of resistor, kW	0,75	1,0	1,5	2,5	3,5	5,5	17,5	17,5	17,5	21	24,5	24,5	35
Pulse current at the output of inverter, A	10	20	10	20	25	30	30	30	30	50	50	50	75
Cross-section of connecting cables, mm^2	0,75	1	1,5	2,5	2,5	2,5	2,5	2,5	2,5	6	6	10	16

During stop at terminals Rb the voltage can reach up to 780VDC. The necessary insulation distancies must be secured when mounting the resistor.

DANGER

After switch-off of supplying voltage it is necessary to wait minimum **10 minutes** until start assembling or disassembling of connecting cables at power terminals Rb.

ATTENTION

It is necessary to secure enough distance between frequency inverters, brake resistor and other equipment in the cabinet, to dissipate the heat.

Take care of additional cooling of brake resistor and other equipment in the cabinet.

5.8.1 Choise of brake resistor

In *Table 5.6.* are shown brake resistors, suitable for frequency inverters **ELDI / V** series.

*Table 5.6. Suitable brake resistors for **ELDI / V** series*

Inverter type	*Inverter power, kW*	*Model brake resistor MITSUBISHI*	*Resistance, Ω*	*Resistor power, W*
ELDI / V-A	0,55	FR-ABR-04K	200	60
ELDI / V-A	0,75 - 1,1	FR-ABR-0.75K	100	80
ELDI / V-A	1,5 – 2,2	FR-ABR-H2,2K	60	100
ELDI / V-B	0,55 – 1,1	FR-ABR-H1,5K/2,2K/3,7K	350/250/150	115-155
ELDI / V-B	1,5 to 3,0	FR-ABR-H3,7K/5,5K	150/110	155-185
ELDI / V-B	4,0 to 7,5	FR-ABR-H7,5K	75	340
ELDI / V-DF	11	FR-ABR-H11K	52	530
ELDI / V-D	15 to 22	2XFR-ABR-H7,5K in parallel	36	830
ELDI / V-D	30 to 37	2 X FR-ABR-H11K in parallel* 3XFR-ABR-H7,5K in parallel*	26 25	1060 1020
ELDI / V-D	45 to 55	3 X FR-ABR-H11K in parallel*	18	1980

***Note**: For bigger powers can be used resistors with lower power, connected in parallel. The total value of received in parallel connection resistor must be not smaller than specified in *Table 5.6*.

The permissible loading of brake resistors type FR-ABR and FR-ABR-H are shown in *Table 5.7*.

Table 5.7. Permissible loading of brake resistors

Type	*FR-ABR (200V)*			*FR-ABR-H (400V)*					
	0,75k	2,2k	3,7k	0,75k	2,2k	3,7k	5,5k	7,5k	11k
Permissible pulse loading	100% / 5 sec.			100% / 5 sec.					
Permissible operation on cycle	10%			10%			6%		

Overall and mounting dimensions of brake resistor type FR-ABR and FR-ABR are shown in *Figure 5.5*. and *Table 5.8*.

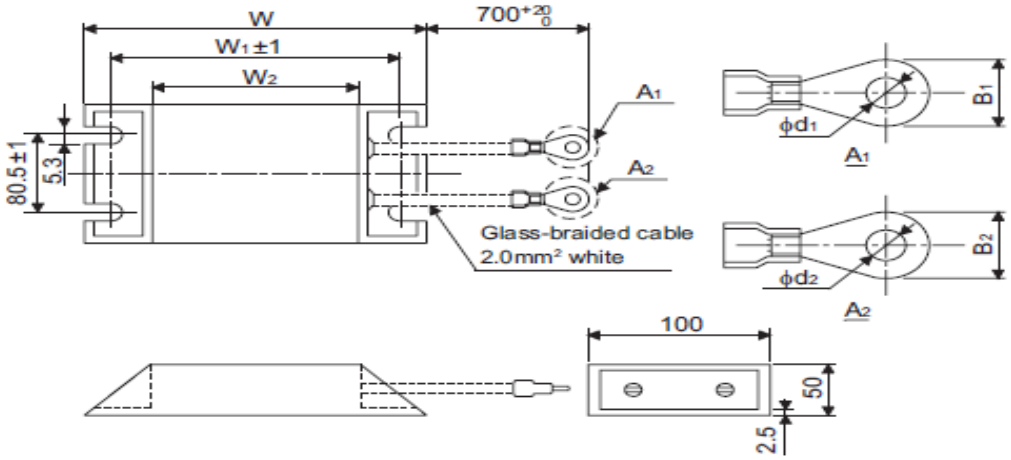

Figure 5.5. Overall and mounting dimensions of brake resistor from Table 5.8

Table 5.8. Overall and mounting dimensions of brake resistor

Brake resistor type		Dimensions, mm					Resistance, Ω	Cable terminals, mm			
		W	W_1	W_2	D	H		A_1		A_2	
								B_1	d_1	B_1	d_2
200V	FR-ABR-0,4K	140	125	100	40	21	200	7.0	4.3	7.0	4.3
	FR-ABR-0,75K	215	200	175	40	21	100				
	FR-ABR-H1,5K	240	225	200	50	26	60				
400V	FR-ABR-H1,5K	215	200	175	40	21	350	7.0	4.3	7.0	4.3
	FR-ABR-H2,2K	240	225	200	50	26	250				
	FR-ABR-H3,7K	215	200	175	61	33	150				
	FR-ABR-H5,5K	335	320	295	61	33	110	9.5	5,3	9.5	5,3
	FR-ABR-H7,5K	400	385	360	80	40	75				
	FR-ABR-H11K	400	385	360	100	50	52	9.0	6,4	9.0	6,4

***Note*:** Use cables with double insulation only, in accordance with the system valtage (for example type HOSVV-F or type HO5RR-F).

ATTENTION

It is not permissible to prolong the brake resistor cables longer than 5 m!

ATTENTION

The interruption or damage to the brake resistor during braking or during movement, leading to activation of protection OSF (over voltage) and dropping the relay "Ready".The motor will stop by inertia (the mechanism shall continue to run). It is necessary to take additional measures to safely stop the mechanism, if it is dangerous.

6 Electromagnetic compatibillity

This manual is developed with aim to help the design of electrical mechanisms with use of frequency inverters ELDI / V. In the manual are described the measures, which have to taken to fulfill the conditions about electromagnetic compatibility. Instructions for mounting and connection of frequency inverters, described in the manual, must be executed exactly. They are obligatory and their correct execution will guarantee covering of EMC standards. The frequency inverters have a certificate for electromagnetic compatibility by standards **EN 61800-3:1996, EN61000-3-2; A1, A2, A14:2000.**

The electrical mechanisms, no matter what they are, create during operation electromagnetic and radio disturbances at different frequencies. Cables radiate electromagnetic and radio disturbances in surrounding environment. Connecting electrical equipment (electrical motors, contactors, etc.) to the supplying grid, without use of input filter, certainly will cause entering of high and low frequency disturbancies and harmonics into supplying grid. They can cause malfunction of other equipment, supplied from the grid.

6.1 Actions to ensure electromagnetic compatibility

The main counter actions against the disturbances are:

- Splitting and galvanic disconnection of power from control circuits;
- Reliable grounding and shielding;
- The big contact surface of the contact by grounding is necessary to achieve low resistance by grounding with aim to remove high frequency disturbances;
- Use of grounding bars (or lamellae) instead of cables;
- By grounding the cable's shield must be connected to grounding bar with the help of special cramps;

It is not possible to prescribe detailed and exact instructions, which can cover all possible electrical equipment. For this reason, in this manual are discussed the common principles only, by their observation the conditions about electromagnetic compatibility can be reached.

6.2 Performance of cable connections

Measures to decrease the input disturbances from supplying grid:

- The input grid filter and frequency inverter must be installed on common grounded metal plate;
- The grid filter and frequency inverter to installed possibly closer, to receive minimal length of connecting cable;
- Use shielded and grounded supplying cable;
- Use shielded and grounded cable from inverter to motor with length no more than 20m;
- Perform grounding this way, that the maximum contact surface of grounding terminal to be received;
- Install the inverter and other equipment in metal cabinet;

6.3 Shielding of connecting cables

Use cables with shield (sleeving).

Grounding of the shield to catch maximum possible surface of the sleeving. The sleeving must not be interrupted. If there are intermediate connectors, they must be in grounded metal boxes.
Special clamps to be used as shown on *Figure 6.1.* The clamps must be fixed on the plate tightly, to have good contact.
The shield grounding of the cables has to be done to common bolt, marked with '**PE**' near the inverter.

Recommended filters:

Filter type	*Current, (A)*	*Inverter power, kW*
3MF-400/8	8	1,5kW to 3kW
3MF-400/16	16	4,0kW to 5,5kW

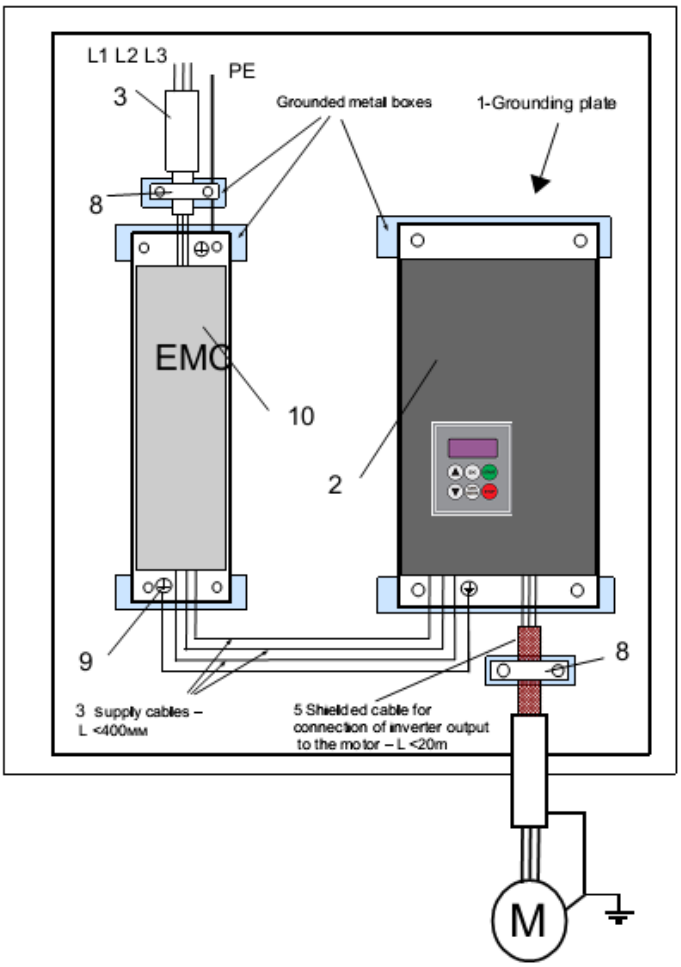

Figure 6.1. Shielding of connecting cables

1. Grounding plate;
2. Frequency inverter ELDI / V;
3. Non-grounded supply cables;
4. Non-grounded cables for outputs of relay contacts of the inverter;
5. Shielded cable for connection of inverter output to the motor;

6. Shielded cable for management and control. For applications, where is needed a big number of cables, there must be used with small cross section (0,5mm^2). The sleeving must be grounded. The sleeving must be not interrupted, and if there are intermediate connectors , they must be in grounded metal boxes.
7. Shielded cable for connecting the brake resistor, if it is used.
8. The fixing and connecting to ground of the shielded conductors 6, 7 and 8 are made as close as possible to the frequency converter.
9. Grounding screw.
10. Input EMC filter connected directly to the power supply with unshielded wire.

***Note*:** In spite of grounding between frequency inverter, motor and sleeving of the cable, it is necessary to connect the protective cables **PE** (yellow-green) to the appropriate terminals of each device.

7 Connecting of control connectors

7.1 Distribution of input-output control interface

Input-output interface of inverters is distributed on 4 connectors on control board – CN1, CN2, CN3 and CN4 as follows – see *Figure 7.1.*

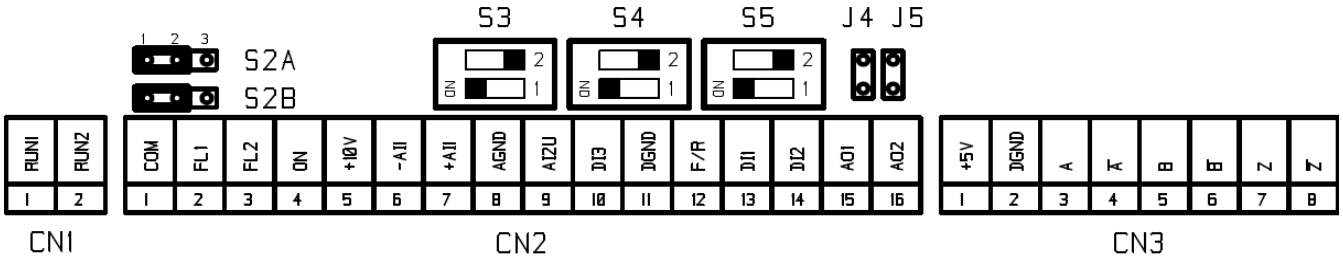

Figure 7.1. Description of connectors on control board

7.2 Description of input-output connectors on control PCB

Table 7.1. ***CN1: Input-output interface*** *(terminal type MKDS2-5.08)*

CN1-1	RUN1	Multifunctional relay output RUN – normally open contact 1
CN1-2	RUN2	Multifunctional relay output RUN – normally open contact 2

Table 7.2. ***CN2: Input-output interface*** *(terminal type CTF1600T)*

CN2-1	COM	Common potential of digital inputs (+24V/ GND)
CN2-2	FL1	Multifunctional relay output – normally open contact 1
CN2-3	FL2	Multifunctional relay output – normally open contact 2
CN2-4	ON	Digital multifunctional programmable input
CN2-5	+10V	Stabilized supply voltage +10V
CN2-6	-AI1	Inverting input on differential analog input AI1
CN2-7	+AI1	Non-inverting input on differential analog input AI1
CN2-8	AGND	Analog ground
CN2-9	AI2U	Multifunctional analog/digital input AI2U
CN2-10	DI3	Multifunctional programmable digital input (fast)
CN2-11	DGND	Digital ground
CN2-12	F/R	Multifunctional programmable digital input
CN2-13	DI1	Multifunctional programmable digital input (fast)
CN2-14	DI2	Multifunctional programmable digital input
CN2-15	AO1	Multifunctional analog/digital input
CN2-16	AO2	Multifunctional analog/digital input

Table 7.3. ***CN3: Speed and possition feedback***
(terminal type CTF0800T or connector HD-15 FM)

CN3-1	+5V	Stabilized supply voltage +5V 5V
CN3-2	DGND	Digital ground
CN3-3	A	Pulse sequence A
CN3-4	A\	Pulse sequence A – inverse signal
CN3-5	B	Pulse sequence B
CN3-6	B\	Pulse sequence B – inverse signal
CN3-7	Z	Zero pulse Z
CN3-8	Z\	Pulse sequence Z – inverse signal

Table 7.4. ***CN4: Series interface*** *(connector type TS8P8C-PCB-S)*

CN4-1	CAN_Rx	Not used
CN4-2	CAN_Tx	Not used
CN4-3	SS	Output – direction of communication Rx/Tx – “0” –receiving/”1”-transmission
CN4-4	RS485_A/TxData	RS485_A or TxData – it is selected by switch S1
CN4-5	RS485_B/RxData	RS485_B or RxData – it is selected by switch S1
CN4-6	-	Not used
CN4-7	+5V	Stabilized supply voltage +5V
CN4-8	COM_RS485	Digital ground for communication

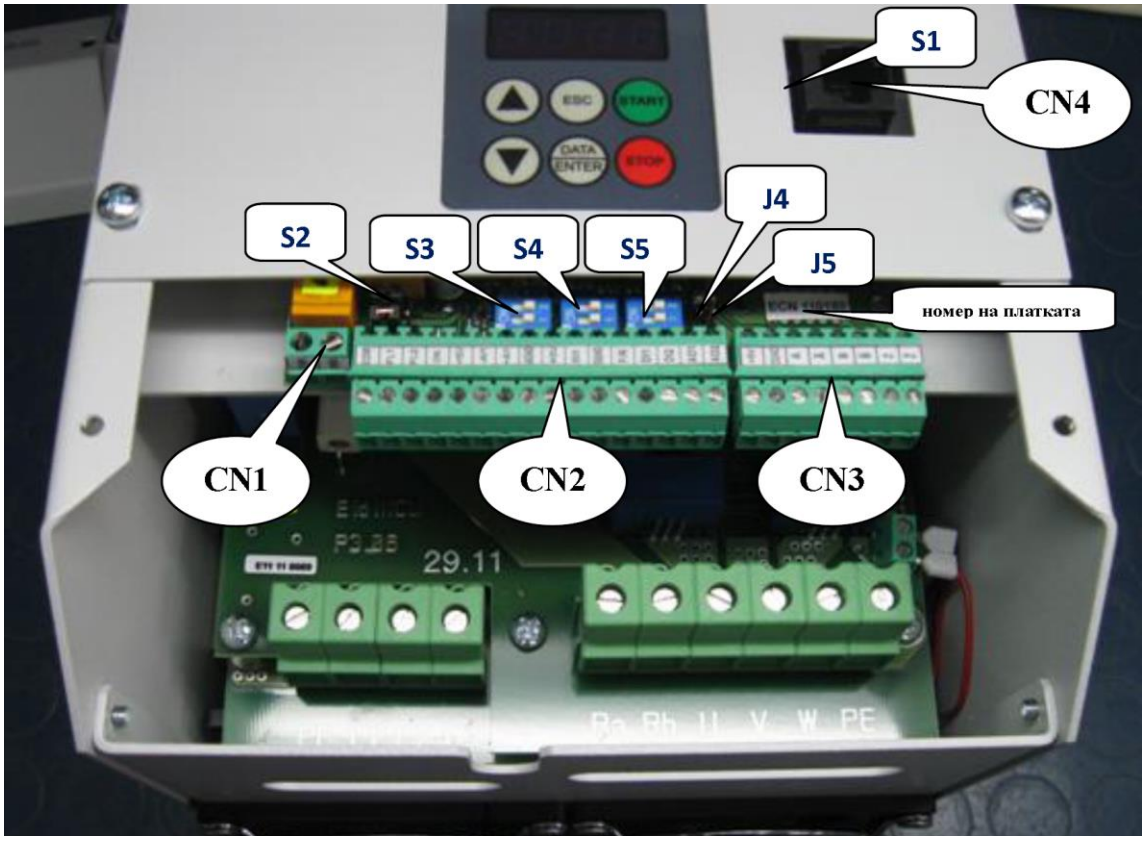

Figure 7.2. Frequency inverter ELDI-V – location of connectors on control board ELDI-CN

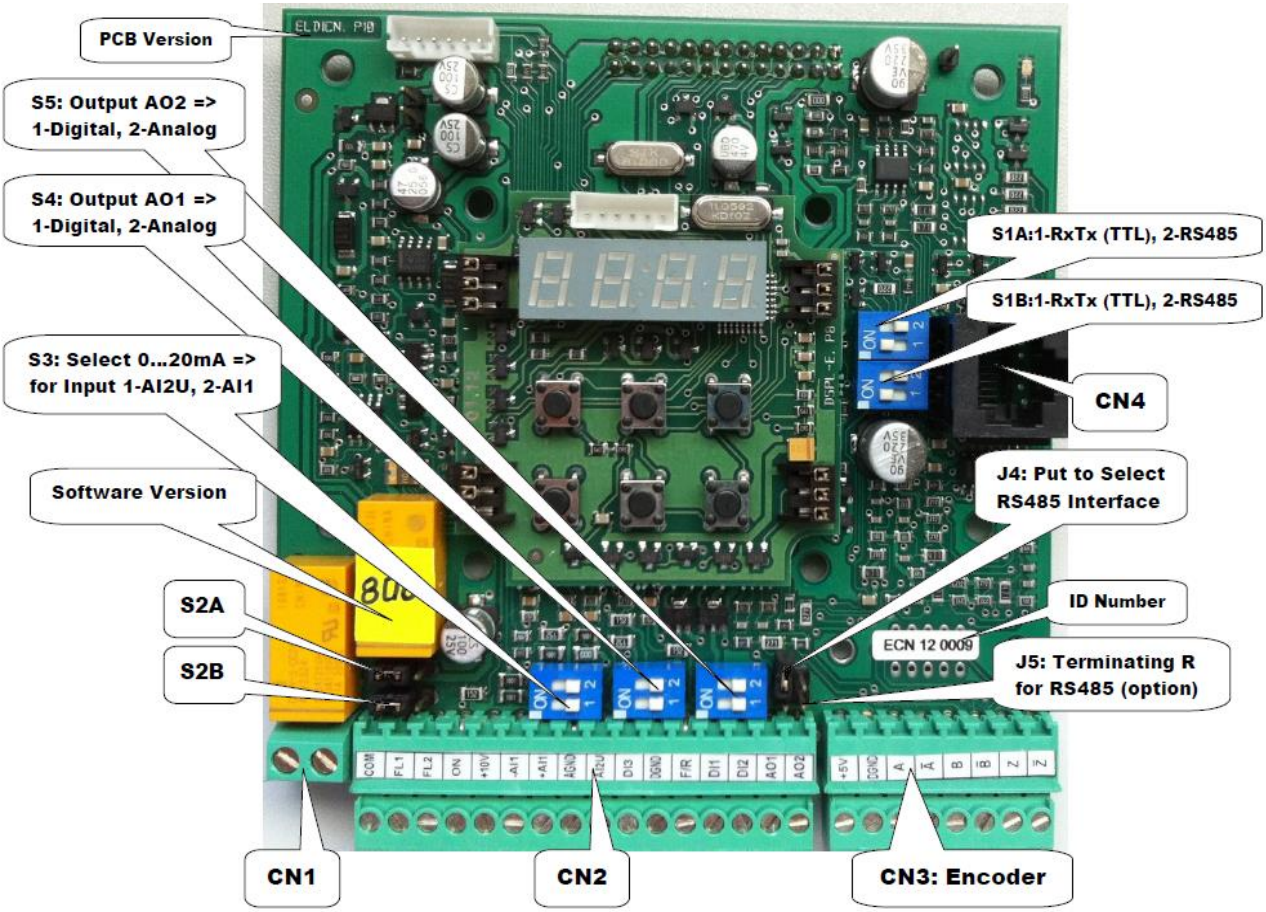

Figure 7.3. Control board ELDI-CN – connectors, micro-switches and jumpers

7.3 Connection of digital inputs

7.3.1 General requirements to wiring

- For remote control with use of digital inputs it is necessary to keep the length of control cable between control device and inverter, to be no more than 50m.
- The cable to be separated from high voltage cables, supplying the inverter and the motor. It is done to be reduced the effect of noise induction from power part or disturbances from other power and relay circuits of external devices.

7.3.2 Описание на цифровите входове

Table 7.5. Digitals inputs – descriptions

Terminal	Name	Description
CN2-1	COM	Common potential on digital inputs (+24V/ GND) Depending on position of jumpers S2A and S2B, on this terminal is supplying +24V (S2A and S2B in position 1-2) or GND (S2A and S2B in position 2-3) to digital inputs S2A and S2B in position 1-2 (left) – the inputs are not galvanically untied and can be activated in two ways: - By connecting of common end of digital inputs to supplied to terminal CN2-1 voltage +24V. See *Figure 7.4*. - By supplying external voltage +24V to each input against DGND. See *Figure 7.5*. 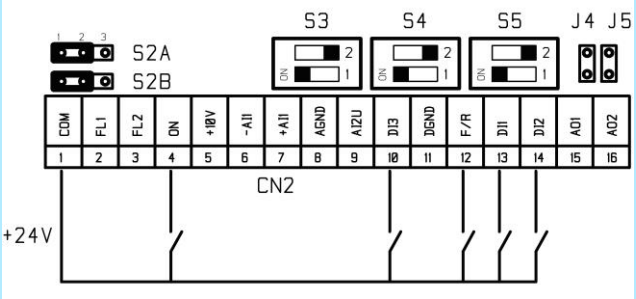 *Figure 7.4.* 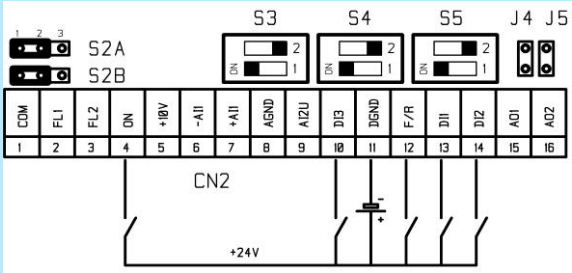 *Figure 7.5.* S2A and S2B in position 2-3 (right) – galvanically untied inputs type (see *Figure 7.6*.) 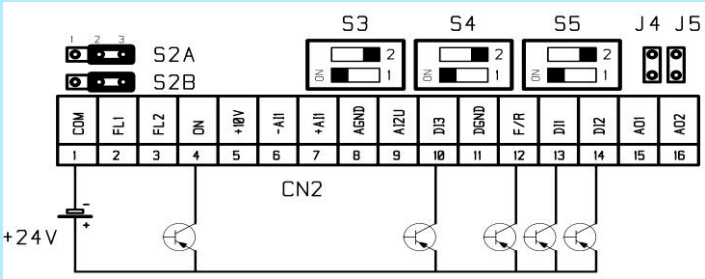 *Figure 7.6*

CN2-4	**ON**	Multifunctional programmable digital input. Factory adjustment – “Start of inverter” ON By activating this input, the inverter starts (it receives permission to operate). The input can be reconfigured. (See the chapter Multifunctional inputs)
CN2-10	**DI3**	Multifunctional programmable digital input (fast)
CN2-11	**DGND**	Digital ground
CN2-12	**F/R**	Multifunctional programmable digital input. Factory adjustment – Forward/Reverse [F/R] By activating the input, the inverter changes the direction of motor rotation. The input can be reconfigured. (See the chapter Multifunctional inputs)
CN2-13	**DI1**	Multifunctional programmable digital input (fast)
CN2-14	**DI2**	Multifunctional programmable digital input

7.4 Connection of analog inputs

7.4.1 General requirements

- For remote control with use of analog inputs it is necessary to keep the length of control cable between analog input and control panel or control device and inverter to be no more than 50m.
- It is necessary this control cable to be separated from high voltage cables, supplying the inverter and the motor. This is made with aim to reduce the effect of noise induction from power part or disturbances from other external power and relay circuits.
- By supplying control signal from external device it is necessary to use shielded cable type with twisted pair.
- The shield must be connected to terminal ⏚, as shown on *Figure 7.7*.

7.4.2 Connection of analog inputs

Connection circuits of differential analog input are shown on *Figure 7.7.*

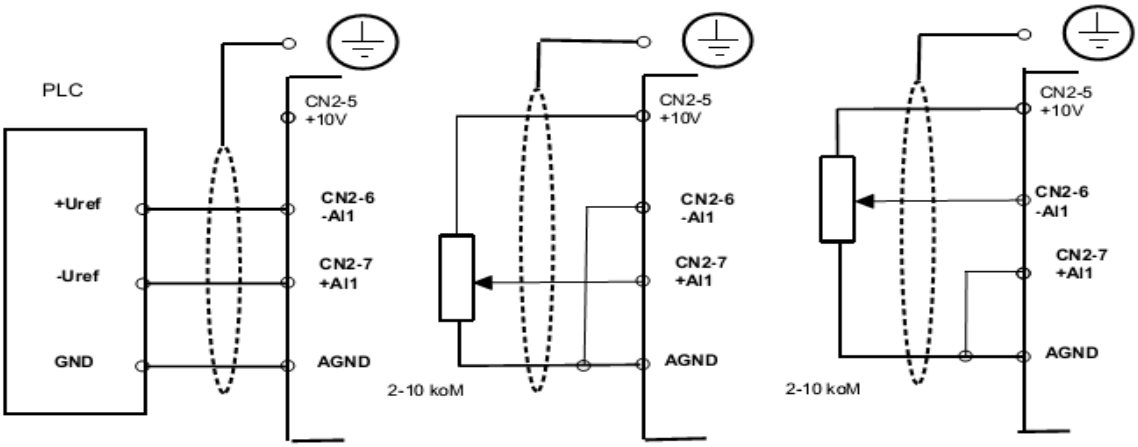

Figure 7.7. Connection circuits of differential analog input

7.4.3 Connecting cables and cable terminals

The size and type of shielded cable are shown in *Table 7.6*.

Table 7.6. Number of terminals and type of the cable

Terminal	***Terminal type***	***Allowed cross-section of the cable, мм²***	***Recommended cross-section, мм²***	***Cable type***
CN2-5 - +10V CN2-6 - -AI1 CN2-7 -+AI1 CN2-8 --AGND CN2-9 –AI2U	CTF1600T	Single core 0,14 - 0,25 Multi core 0,14 - 0,75	0,25 0,55	Shielded twisted pair Shielded pair with polyethylene insulation with external vinyl cover
Shield		0,5 - 1,5	1,25	

Note: It is recommended to use cable terminals and roll-in instrument (without soldering) with aim to simplify the connection and to increase the reliability.

7.4.4 Description of analog inputs

Table 7.7. Description of analog inputs

Terminal	***Symbol***	***Description***
CN2-5	**+10V**	Stabilized power supply +10V
CN2-6 CN2-7	**-AI1** **+AI1**	Differential analog input. Factory adjustment “Speed reference”. (0 to +/-10V) By changing the voltage on this input, the output frequency will be controlled (the revolutions of the motor). The direction of rotation is specified from the polarity of analog voltage (+AI1 is non-inverting, and -AI1 is inverting input). This input is multifunctional and can be reconfigured. If analog signal is current (0 to 20mA), it is supplied to input “+AI1”, by switching-on microswitch S3.2=ON.
CN2-8	**AGND**	Analog ground
CN2-9	**AI2U**	Multifunctional analog/digital input AI2U. The input signal can be: • Voltage from 0 to +10V – if microswitch S3.1 is OFF • Current from 0 to 20mA – ако microswitch S3.1 is in position ON The input is multifunctional and can be reconfigured. It can be reconfigured as analog or as digital.

7.5 Interface for speed and position feedback

The control PCB is produced in 2 variants – with standard and with exstended interface.

7.5.1 Standard interface for feedback (terminals CN3)

Table 7.8. Description of signals on terminals CN3

CN3 pin#	***Signal Name***	***Incremental encoder***			***SC*** *(Sin_Cos)*
		Ab	***Fd*** *(Freq_Directin)*	***Fr*** *(Forword_Reverse)*	
1	+5V	…	…	…	…
2	DGND	…	…	…	…
3	A	A	Freq	Forw	Cos
4	A\	A\	Freq\	Forw\	Cos\
5	B	B	Dir	Rev	Sin
6	B\	B\	Dir\	Rev\	Sin\
7	Z	Z	…	…	…
8	Z\	Z\	…	…	…

7.5.2 Extended interface for speed and position feedback (connector CN3D)

Connector CN3D is used for encoders with position code by control of synchronous motors and precise servo drives. It is mounted as option (by customers request) instead of terminal block CN3.

Table 7.9. Description of signals on connector CN3D for feedback by extended interface

CN3 pin#	***ELDI-CN***	***Incremental***			***Commut. Outputs***	***SinCos Comutation***	***SinCos encoder***	***Absolute EnDat***	***Absolute SSI***	***Stegmann 485 (HiperFace)***
#	***Signal***	***Ab***	***Fd***	***Fr***	***SErVO***	***SC c***	***SC***	***EndAt***	***SSI***	***HiPEr***
1	**+A_sin**	A	Freq	Forw	…		Cos	…	…	…
2	**-A_sin**	A\	Freq\	Forw\	…		Cos\ref	…	…	…
3	**+B_cos**	B	Dir	Rev	…		Sin	…	…	…
4	**-B_cos**	B\	Dir\	Rev\	…		Sin\ref	…	…	…
5	**+Z_enDat**	Z	Z	Z	…		…	Data (in/out)	Data\(in)	Data\(in/out)
6	**-Z_enDat**	Z\	Z\	Z\	…		…	Data\ (in/out)	Data\(in)	Data\(in/out)
7	**+U_sin**	…	…	…	**U**	Sin	…	…	…	…
8	**-U_sin**	…	…	…	**U**	Sin\	…	…	…	…
9	**+V_cos**	…	…	…	**V**	Cos	…	…	…	…
10	**-V_cos**	…	…	…	**V**	Cos\	…	…	…	…
11	**+W_enClck**	…	…	…	**W**		…	Clock (out)	Clock (out)	-
12	**W_enClck**	…	…	…	**W**		…	Clock\ (out)	Clock\ (out)	-
13	**+5V**	…	…	…	…		…	…	…	…
14	**GND**	…	…	…	…		…	…	…	…
15		…	…	…	…		…	…	…	…

7.5.3 Supported interfaces

- Incremental encoder with and without zero pulse [A, A\, B, B\ and option Z, Z\] – “Ab”.
- Incremental encoder with pulse sequences for frequency and signal for direction with and without zero pulse [Freq, Freq\, Dir, Dir\ and option Z, Z\] – “Fd”
- Incremental encoder with pulse sequences for both directions with and without zero pulse [Forw, Forw\, Rev, Rev\ and option Z, Z\] – “Fr”.
- Encoder with additional UVW commutation signals [U, U\, V, V\, W, W\] – “xx.SerVO”.
- Encoder with additional sin and cos signals per revolution [Sin, Sin\, Cos, Cos\] – additional option on STR-Vx1.
- SinCos encoder – [Sin, Sinref, Cos, Cosref] – “SC.xxxxx”
- Encoder with main or additional absolute sensor with SSI interface [Data (in), Data\ (in), Clock (out), Clock\ (out)] – “ SSI”
- Encoder with additional Stegmann 485 (HiperFace) communication - [Data (in/out), Data\ (in/out)] – “ xx.HiPEr”.

7.6 Multifunctional outputs

Table 7.10. Multifunctional outputs

Terminal	*Symbol*	*Description*
CN1-1 **CN1-2**	**RUN1** **RUN2**	Multifunctional relay output RUN1- RUN2 Factory adjustment – Zero Speed RUN1, RUN2 – normally opened contacts of relay with parameters: 0,1A/220VAC.1A/30VDC.
CN2-2 **CN2-3**	**FL1** **FL2**	FL1- FL2 Multifunctional relay output Factory adjustment – Ready On FL1, FL2 are brought-out the normally opened contacts of relay with parameters : - 0,1A/110VAC 1A/30VDC. When the inverter is supplied and there is no switched-on protection, the relay contact is closed. By absence of supply voltage, the contact is opened
CN2-15	**AO1**	Multifunctional analog/digital output AO1/DO1. The type of output is choosen from position of microswitch S4. Only one from the switches can be switched ‘ON’ ! S4-1:ON (S4-2:OFF) – on CN2-15 is brought-out digital output DO1, NPN, open collector (0.5A/50VDC). S4-2:ON (S4-1:OFF) – on CN2-15 is brough-out multifunctional analog output AO1, with parameters: 0 to 20 mA or 4 mA to 20 mA.
CN2-16	**AO2**	Multifunctional analog/digital output AO2/DO2. The type of the output is choosen from position of microswitch S5. Only one from the switches can be switched ‘ON’ ! S5-1:ON (S5-2:OFF) – on CN2-16 is brought-out output DO2, NPN, open collector (0.5A/50VDC). S5-2:ON (S5-1:OFF) – on CN2-16 16 is brought-out multifunctional output AO2, with parameters: 0 to 20 mA or 4 mA to 20 mA. ***Note:*** If S2A and S2B in position 1-2 (jumpers on left), the digital inputs are not optrone untiedand are from type NPN opened collector to DGND (CN2-10), as shown on *Figure 7.8.* If S2A and S2B are in position 2-3 (jumpers on right), the output are optrone untied and they are NPN opened collector to COM (CN2-1), as shown on *Figure 7.9.*

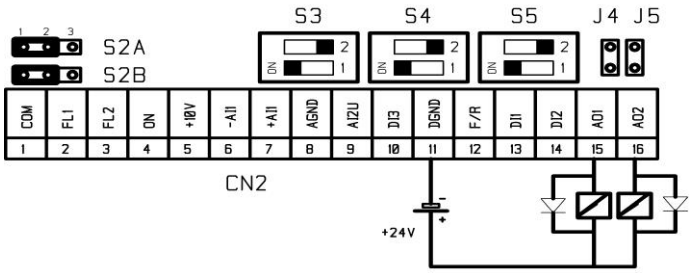

Figure 7.8. Position 1-2 of S2A and S2B

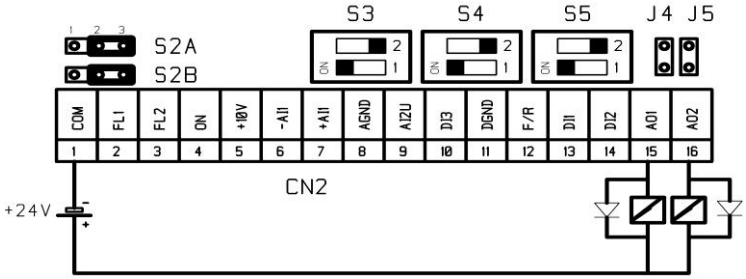

Figure 7.9. Position 2-3 of S2A and S2B

7.7 Series communication interface

Series communication is brought-out on connecter CN4 (type RJ45).

7.7.1 Series communication interface for connection with PC

Microswitches are as follows: S1A-1:‘ON’,S1A-2:‘OFF’,S1B-1:‘ON’,S1B-2:‘OFF’, jumper J4:‘OFF’ (non connected). For connection with PC is offered as an option external module – galvanically insulated RS-232 interface to signals RxD and TxD from control PCB (see *Figure 7.10*).

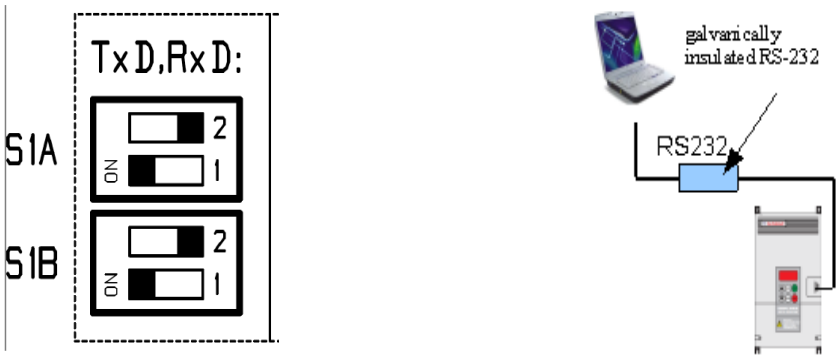

Figure 7.10. Series communication interface for connection with PC

For RS-232 connection, it is recommended a cable with maximal length of 15m. If the tramsmission speed is higher than 38400bps, it is required the maximal length of the cable to be 3 m.

7.7.2 Series communication interface for connection with PLC

It is used standard Modbus RTU protocol by two-conductor RS-485 interface. In this case micro-switches are as follows:
S1A-1:‘OFF’, **S1A-2**:‘ON’, **S1B-1**:‘OFF’, **S1B-2:‘**ON’and jumper **J4**:‘ON’ (set).
With jumper j5 can be included terminating resistor 120Ω, if necessary.
The switches must be respectively in one of the following 2 variants: (see *Figure 7.11*)

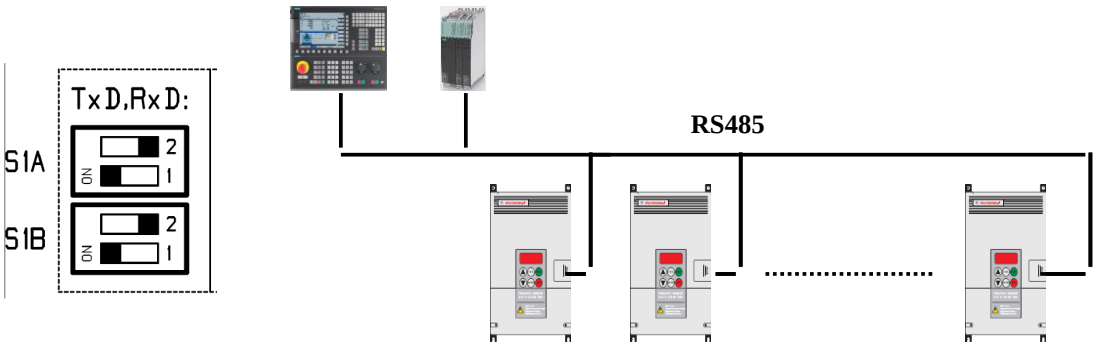

Figure 7.11. Series communication interface for connection with PLC

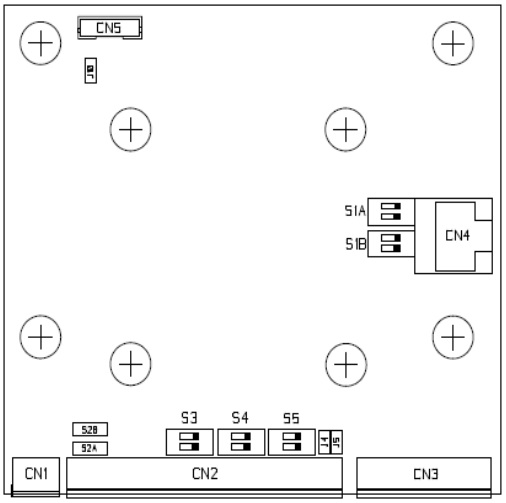

Figure 7.12. General view of control board

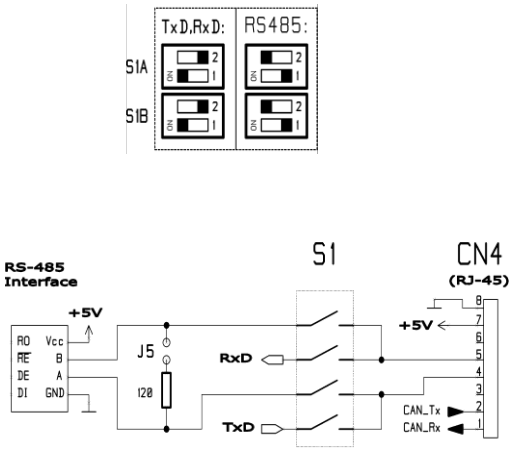

Figure 7.13. General view of switches and terminals of communication connector

The general view of switches on control board ELDI-CN and the terminals of communication connector are shown on *Figure 7.12.* and *Figure 7.13.*

For communication speeds up to 38400 bps in regime RS-485 the recommended maximal length of the cable is 100m. If the speed of transmission is higher, the maximal length of the cable is 15m.

The maximal number of devices in a net is 32.

8 Running into exploitation

8.1 Operator's panel - description

In this chapter are examined the functions of operator's panel and operation with it. Operator's panel consists of:

- four digit LSD display for visualization;
- keyboard with functional buttons;

Description of functional buttons is shown on *Figure 8.1*.

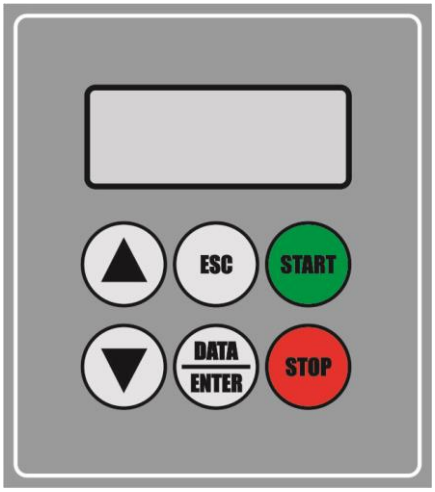

START — Motor start

STOP — Motor stop

DATA/ENTER — Entering in regime visualization/adjustment, saving of changed parameter, return in main menu

ESC — Rejection or quit without saving the value of changed parameter

▲ — Scrolling the menu/change (increasing) the value of chosen parameter

▼ — Scrolling the menu/change (decreasing) the value of chosen parameter

Figure 8.1. Panel view

8.2 Types of parameters

Parameters are divided in two types:

- Parameters for visualization "b". By these parameters can be featured the current value of some constant. When on the terminal is featured a parameter of this kind, buttons-arrows(▲ and ▼) and DATA/ENTER are not active.

- Parameters for adjustment "X.XX". Characteristics of frequency inverters are adjusted.

8.3 Visualisation mode

Entering in visualization mode becomes, that after choosing of parameter for visualization, the button DATA/ENTER is pushed. Secondary press of the button leads to escape from this mode and returning in the main tree with parameters.

8.4 Adjustment mode

Entering in adjustment mode/change of parameter, becomes after reaching the desired parameter, press the button DATA/ENTER. Its value can be changed with buttons-arrows (▲ and ▼). To remember the new value it is enough to press DATA/ENTER, after which we will return again in the main tree with parameters. To refuse or quit without memorizing the parameter value becomes by pressing ESC.

ATTENTION

Memorizing of parameter becomes after pressing the key DATA/ENTER!

Adjustment of some parameter can be done by the following sequence of actions:

- Finding the desired parameter in the menu of parameters, by the use of buttons-arrows▲ and ▼.
- Entering in mode correction of parameter by button DATA/ENTER.
- Change the value of the parameter by button ▲ and ▼.
- Memorizing the parameter by pressing of button DATA/ENTER.
- Returning to main menu with parameters without memorizing the change of parameter, by button ESC.

8.5 Correction mode of parameter type „control word”

- Entering in correction mode of parameter type “control word” becomes by button DATA/ENTER. On the display appears the control word.
- Choosing the digit, which has to be changed, becomes by the button arrow-up ▲. By each pressing of this button it is chosen the next digit to the left. The chosen digit is blinking.
- To change the value of blinking digit becomes by the button arrow-down ▼. By each pressing of this button, the blinking digit changes its value (“0” or “1”).
- The changed control word can be entered by button DATA/ENTER or we can quit from the change with button ESC.

8.6 Examples of operating with keyboard

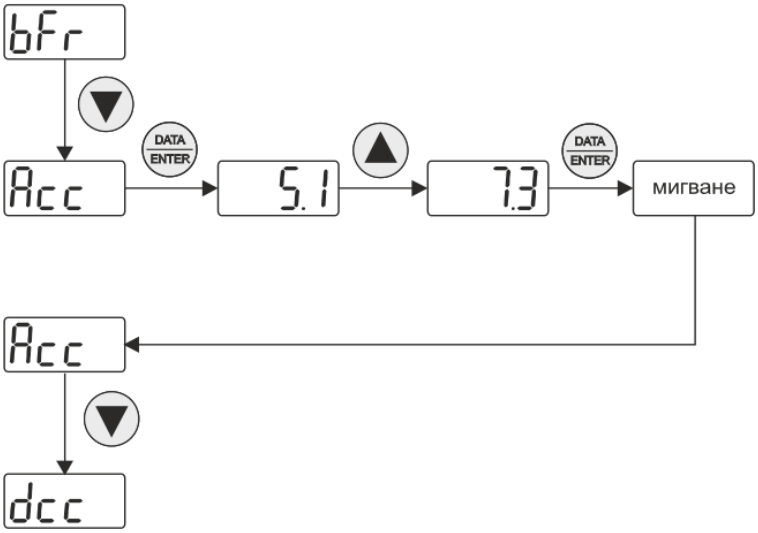

Figure 8.2. Example 1 - Adjustment the time for acceleration

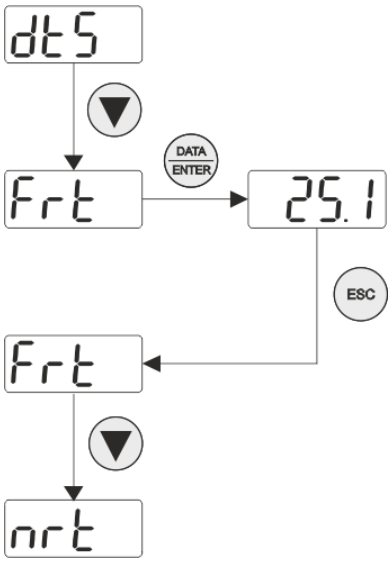

Figure 8.3. Example 2 - Visualization the running output frequency

ATTENTION

When you change the values of parameters during operation of the motor, it must be sure, that this change will not bring to emergency. It is recommended the changes of parameters to be made by stopped motor only.

9 Parameters of frequency inverter (version V8)

The parameters of frequency inverter are grouped in 15 functional menus, described below.

Note: The tables with parameters and values by default are referred to drives **5,5kW and software version V8**. If your software version is different, ask the producer – "Electroinvent" Ltd or distributor about more actual version of this Manual or Appendix – table with parameters for your version.

Table 9.1. Used abbreviations

Used abbreviations:	
AC motor	asynchronous motor
FB	feedback
PI	proportional- integral
VC	Vector Control
U/f	control mode U/f
P - part	proportional part
I - part	integral part
D/A	digital / analog inputs
PLC	programmable logic controller

Table 9.2. Speed reference

9.1 Menu 0 (A) - Speed reference

№	Parameter	Explanation	MODBUS address	Range		Factory setting
A.00	Ref-Int Hz	Speed reference – full part	0x0000	0 – 400	Hz	0
A.01	Ref-Frc Hz	Frequency reference – fraction part	0x0001	0.00 – 0.99	Hz	0.00
A.02	Spd.Ref1 Hz	Programmable frequency 1 (Ref1)	0x0002	0.0 – 400.0	Hz	0.00
A.03	Spd.Ref2 Hz	Programmable frequency 2 (Ref2)	0x0003	0.0 – 400.0	Hz	0.00
A.04	Spd.Ref3 Hz	Programmable frequency 3 (Ref3)	0x0004	0.0 – 400.0	Hz	0.00
A.05	Spd.Ref4 Hz	Programmable frequency 4 (Ref4)	0x0005	0.0 – 400.0	Hz	0.00
A.06	Spd.Ref5 Hz	Programmable frequency 5 (Ref5)	0x0006	0.0 – 400.0	Hz	0.00
A.07	Spd.Ref6 Hz	Programmable frequency 6 (Ref6)	0x0007	0.0 – 400.0	Hz	0.00
A.08	Spd.Ref7 Hz	Programmable frequency 7 (Ref7)	0x0008	0.0 – 400.0	Hz	0.00

Table 9.3. Visualization

9.2 Menu 1 (b) - Visualization

№	Parameter	Explanation	MODBUS address	Range		Factory setting
b.00	Disp.Par.ID	Choice of constant for visualization: **0** : **Voltage** on capacitor battery **1** : Phase **current** of the motor **2** : **Speed** of rotation of the motor **3** : Output **frequency** of inverter **4** : **Condition** of the drive **5** : **Version** of the software **6** : **Position encoder** (инкрементален) **7** : **Position encoder** (UVW) **8** : **State of multifunctional inputs** **9** : **Reference** for pressure (option for pump control) **10** : **Pressure FB (**by pump control)	0x0101	0 - 7	V A rpm Hz - - - - - atm atm	0
b.01	Displ.Value	Running value of chosen constant	0x0102	-	-	-

Table 9.4. Parameters of the motor

9.3 Menu 2 (C) - Parameters of the motor

№	Parameter	Explanation	MODBUS address	Range		Factory setting
C.00	Unom V	Nominal line voltage	0x0200	100 - 420	V	380
C.01	Inom A	Nominal phase current	0x0201	0.5 – 255.0	A	12.0
C.02	Pole pairs	Maximal frequency	0x0202	1 - 10		2
C.03	Enc. Type	Base frequency	0x0203	0 – 7		0
C.04	Enc. Pulses	Nominal speed	0x0204	64 - 8000		4096
C.05	Frq Max Hz	Number of pole pairs	0x0205	25 - 400	Hz	100
C.06	Frq Base Hz	Type of encoder	0x0206	25 - 400	Hz	50
C.07	Spd nom rpm	Pulses per revolution (digits) of encoder	0x0207	100 - 6000	rpm	1400
C.08	MotPower kW	Nominal power (if assign power 0 kW, then the entered C.01:**Inom** is determining)	0x0208	0.0 - 132.0	kW	0.5
C.09	T_rotor ms	Electrical time constant of the rotor (only for AC motors with vector control + feedback	0x0209	7 - 327	ms	75

Table 9.5. General adjustments

9.4 Меню 3 (d) - General adjustments

№	Parameter	Explanation	MODBUS address	Range		Factory setting
d.00	MainsVtg V	Reference of grid voltage	0x0300	127 - 440	V	380
d.01	fInvert.kHz	Reference of carrier frequency	0x0301	1 - 14	kHz	10
d.02	MotCtrl Typ	Control mode: **0** – **U/f** mode for **AC** motor without feedback **1** – **U/f** mode for **AC** motor with feedback **2*** –**VC** mode for **AC** motor without feedback **3** – **VC** mode for **AC** motor with feedback **4***– **VC** mode for synchronous motor with permanent magnets without speed feedback **5** - **VC** mode for synchronous motor with permanent magnets with speed feedback ***Note**: Control modes 2 and 4 (**VC without speed feedback**) are not yet activated. By their selection it must be performed the corresponding modes with speed feedback – **3** or **5**.	0x0302	0 - 5	-	0
d.03	Operat.Mode	Operating mode of the inverter: **0** – Control via reference for **Speed** **1*** – **Reserved** for future use **2** – Control vie reference for **Position** **3*** – **Reserved** for future use **4*** – **Reserved** for future use **5*** – **Reserved** for future use ***Note*:** In selection mode, marked as "**Reserved** for future use" is implemented by control via reference for **Speed** (**0**)	0x0303	0 - 5	-	0
d.04	Fan-On Levl	Fan switch-on level	0x0304	0.37–1.00	-	0.7
d.05	Prot.Enable	Activated protections – command word **bit 3**: Reserved; **bit 2**: Reserved; **bit 1**: 0-switch-off / 1-switch-on; **bit 0**: 0-switch-off / 1-switch-on **bit 1** – Activating protection against break-off of output phase in regime „DC-brake“. **bit 0** – Activating protection against break-off of output phase during rotation.	0x0305	0 - 3	-	0
d.06	Gen-Cmd.Wrd	Common word for common adjustments **bit 3**: **Reserved** (unused); **bit 2**: Type of analog speed reference; **bit 1**: Order of UVW signals from encoder; **bit 0**: Order of increm. signals from encoder 0 - / 0 – unsigned / 0 – normal / 0– normal 1 – / 1 – signed / 1 – reversed / 1– reversed	0x0306	0 - 7	-	0
d.07	Defaults/ Save	**1**: Loading the parameter values of the recorded **backup configuration** in RAM of the inverter **2**: Save the current values of the parameters of RAM as a backup configuration in flash memory **3**: Save the current values of parameters RAM in the flash memory **4**: Reset offset of the absolute encoder saved	0x0307	0 - 3	-	0

		in flash memory (when managing synchronous motor) **Notes**: 1. Recording the values of changed parameters from RAM in the flash memory is done automatically when turning off the power. Set the value **3** of parameter **d.07** instantaneously initiates recording the changed parameters in the flash memory. These parameters are automatically loaded from flash memory to RAM when powering the inverter. The parameters recorded as a **backup configuration** is not automatically loaded into RAM. They do not change when you turn off the power, but only when you set value **2** of parameter **d.07**. 2. Operations 1-4 are activated only when inactive (off) status of the inverter (inactive input "Run").				
d.08	Hi-Lvl Appl	Selection of specialized program for control: **0** – standard drive **1** – pump control	0x0308	0 - 1	-	0

9.4.1 General adjustments - detailed description

- ***Parameter d.00* - Reference of input grid supply**

- For supply grid 220V/AC +/-10% - it is entered **d.00**= 220
- For supply grid 380-420V/AC +/-10% - it is entered **d.00**= 380-420

***Note*: Reference the value of parameter becomes by stoped motor. The correct reference is important for correct operation of protections USF and OSF**

- ***Parameter d.01* - Reference of carrier frequency**

The carrier frequency is the frequency of PWM, at which works the power unit – the outputs U,V and W. The choice of carrier frequency depends on:

The distance between the inverter and the motor:

Table 9.6. Recommended values depending on the cables' length

Cable length	up to 50 m	up to 100 m	above 100 m
Carrier frequency	8 - 12 kHz	4 - 8 kHz	2 – 4 kHz

Depending on the motor power:

Table 9.7. Recommended values depending on the motor power

Motor power	up to 3kW	from 5 – 15 kW	from 18 – 30 kW	from 37 – 100 kW
Carrier frequency	from 11 – 16 kHz	from 8 – 11 kHz	from 4 – 8 kHz	from 1 – 4kHz

***Note*:** The change of cerrier frequency obligatory must be done by stoped motor (non active input **CN2-4** On/Off).

Influence of cerrier frequency upon overloading possibilities of the inverter.
When using cerrier frequencies higher than 10kHz, it must be known, that the overloading possibilities of the inverter decrease and can become lower than 120%. On *Figure 9.1* it is shown the overloading depending on cerrier frequency.

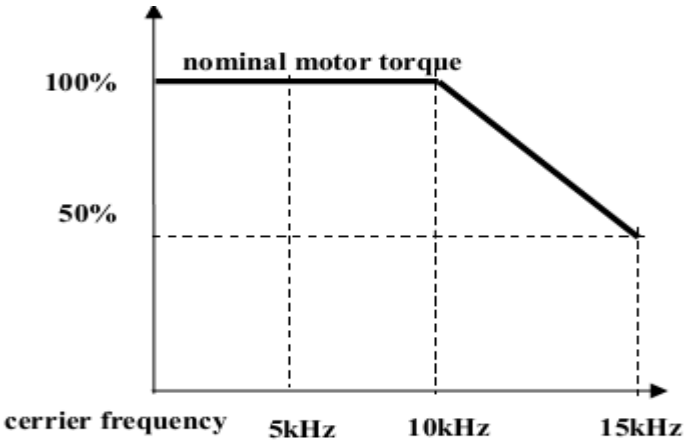

Figure 9.1. Overload depending on the carrier frequency

Recommendations:

- If at low speed of motor rotation the motor torque is unstable – decrease the carrier frequency;
- If electromagnetic disturbances from power unit influence to other equipment, near inverter, decrease the carrier frequency;
- If the leakage current between the inverter's corpus and protective grounding is bigger – decrease the carrier frequency;
- If in the motor is heard "metallic" noise – increase the carrier frequency;

- ***Parameter d.02*** **- Choice of control mode**

Control of asynchronous motor with constant ratio U/f without speed feedback (U/F)

When choosing a d.02 = 0

With this control mode the minimal frequency of rotation, by which the nominal motor torque is achieved is 2,5 to 5 Hz or 150 to 300 RPM for four-pole motor (1500/50Hz).
The range of regulation by constant torque 1:20 (at Fmax. = 50Hz). Achieving bigger diapason is for motor torque account. On *Figure 9.2*. is shown the motor torque in function of the revolutions.

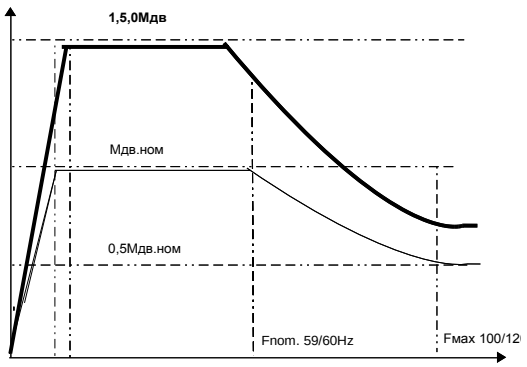

*Figure 9.2.*The motor torque in function of the revolutions *(U/F)*

This control mode doesn't require parameterization (autotuning) and it is suitable when it is necessary one inverter to control several smaller motors, connected in parallel to outputs U, V, W.
It is recommended to be used control of mechanisms, which don't need high starting torque and dynamics of motor control.
The mechanisms, for which is recommended to use U/F control mode are: pumps, fans, conveyo belts, high speed spindles (12000 – 18000 об/мин.), etc.

Control of asynchronous motor with constant proportion U/f with speed feedback

When choosing a d.02 = 1 (U/F+OB)
With this control mode can be achieved a nominal motor torque by frequency reference = 0Hz (stopped motor). The range of speed control by constant torque achieves 1:500 (by Fmax=50Hz). Bigger range can be reached with more precise adjustment of speed regulator. On *Figure 9.3.* is shown the motor torque depending on the revolutions.

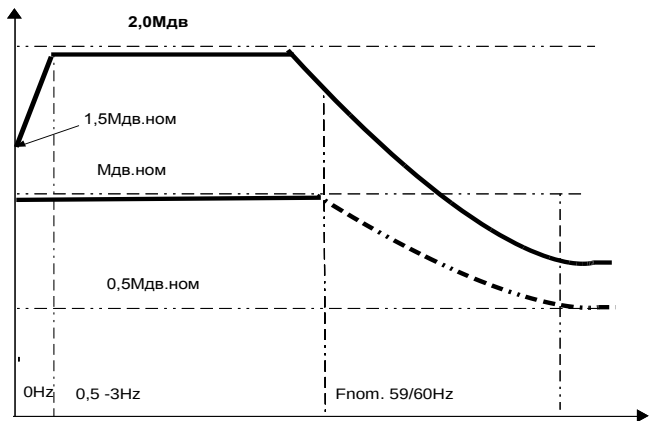

Figure 9.3. The motor torque depending on the revolutions (U/F + OB)

This control mode doesn't require parameterization (autotuning). It is necessary to be entered the parameters of the motor, which are written on the factory's label. The parameters, which are especially important for normal work of the motor, are C.04. (nominal revolutions) and C.05.(number of pole pairs). On the motor it is mounted sensor for speed feedback (pulse coder).
The control mode U/F with FB can be applied in cases, when the pulse coder has to be mounted on the mechanism.

Note:
When pulse coder is mounted on mechanism, it is necessary to be known in advance the transmission ration between motor and the driven object. In parameter C.07 is interred the recalculated value of pulses number.

The availability of windage between motor and the pulse coder can cause unwanted vibrations, which are dangerous for the mechanism and in some cases it can be damaged.

Recommendation*:*
- When the pulse coder is mounted on the mechanism, us one with a big number of pulses.
- When it is needed a large range of speed control, use pulse coder with bigger number of pulses.

Vector control of asynchronous motor without speed feedback (sensorless)

When choosing a d.02 = 2 - (VC)
With this control mode is achieved stability of motor revolutions in the range of loading from 0 to +/-2,0 Mmot nom without need of speed feedback. The minimal frequency of rotation, by which can be achieved 1.5 to 2,0 Mmot.nom is 1,5 to 3 Hz. The motor torque as function of the revolutions is given on *Figure 9.4.*

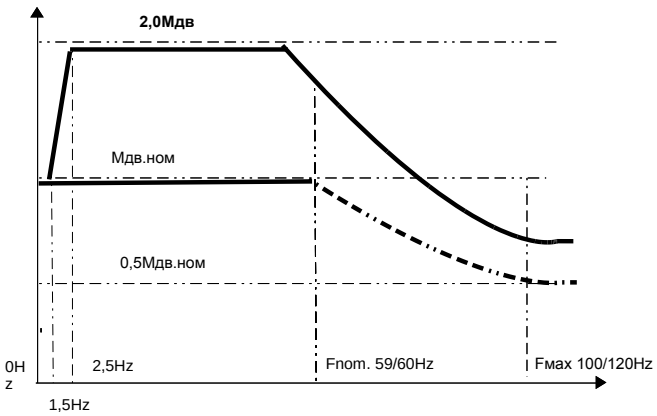

Figure 9.4. The motor torque as function of the revolutions (VC)

This control mode requires parameterization (autotuning), as follows:

- Full autotuning – when the motor is unknown – there is no factory label. It is necessary the motor to be disconnected from the driven mechanism;
- Partial autotuning – when the motor is known it is enough to start the function "Measurement of stator resistance";

Vector control of asynchronous motor with speed feedback

When choosing a d.02 = 3 - (VC+OV)

With this control mode can be reached double motor torque be frequency reference = 0Hz (stopped motor) (*Figure 9.5.*). The range of speed regulation by constant torque reaches 1:1000.

On *Figure 9.5.* is shown the motor torque as function of motor revolutions.

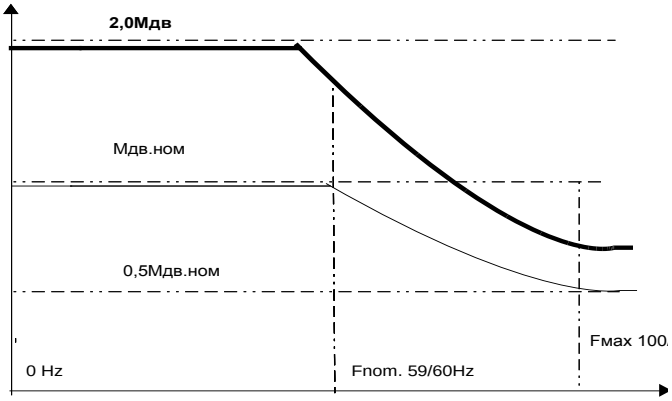

Figure 9.5. The motor torque as function of motor revolutions (VC+OV)

This control mode requires parameterization (autotuning) when the motor is unknown – there is no factory label.

Obligatory condition is on the motor to be assembled a sensor for speed feedback (encoder) with 1024 to 8000 PPR.

It is recommended to be used for control of mechanisms which require high start torque, high dynamics and large range of motor speed regulation. It can be used for positioning and creating of synchronous shaft.

The mechanisms for which this mode can be applied are servo drives and spindle drives for machine tools, trans manipulators, lifts, etc.

It can realize operation of asynchronous motor as step motor, by control mode type "Step and direction". It is suitable for single axes positioning mechanisms, which require high dynamics, precise positioning and simple control.

***Note*:** This control mode is not recommended to be applied in cases when encoder is mounted on the mechanism

Vector control of asynchronous motor without speed feedback

When choosing a.02 = 4
Note: Control mode № 4 is not realized.

Vector control of asynchronous motor with speed feedback

When choosing a d.02 = 5
This control mode uses high torque motors with permanent magnets. It can be reached 2.0 to 3.0 Mmot by short time torque overloading.
The range of speed regulation is 1:5000. Bigger range can be achieved by precise adjustment of speed regulator (See Chapter 9.10 Speed regulator). It is not required parameterization (autotuning).
Obligatory must be entered:
Motor parameters: nominal current, nominal revolutions, number of pole pairs.
Pulse coder parameters: type of pulse coder (C.06); number of pulses per revolution (C.07)

Note: Pulse coder, mounted to the motor, must have positioning pulse sequence U, U/, V, V/, W, W/, which has to corresponds to the number of pole pairs of the motor.

Possibilities of the control mode:
It is used for control of mechanisms, which require higher dynamics and large range of regulation of motor revolutions.
Positioning and creating synchronous shaft between two mechanisms. It can realize operation of asynchronous motor as step motor, by control mode “Step and direction”. The mechanisms, for which it is applicable, are: servo drives for machine tools, trans manipulators, aggregate machines, lifts, etc, which use synchronous motors with permanent magnets.

- ***Parameter d.03*** **– Operating mode of the inverter**

The speed control of the inverter is carried out by any of the three main modes:

- Control via reference for **speed**, at which the assignment submitted by a digital / analog multifunctional input via serial (MODBUS) interface or the command panel, directly determines the speed of the motor. This mode is selected when the parameter **d.03** is set value **0** (**d.03** = 0).

- Control via reference for **position** in which the assignment submitted by the special fast digital multifunction inputs or through the serial (MODBUS) interface defines the desired position of the motor shaft. The angular velocity, with which reaches the specified position depends on the pulse frequency entering in the fast digital inputs or (when managing via serial interface) from the interval and pitch renovation of reference for position. In control mode by position are relevant also selected settings of the positional regulator - parameters **J**.05, **J**.06, **J**.07. This mode is selected when the parameter **d.03** is set value **2** (**d.03** = 2).

- Control via reference for **torque**. This operation is not implemented in this version of the inverter.

- Besides the above three main modes of operation are possible theirs variations which will be described after they are implemented. In the present implementation of the inverter are preserved values of **d.03**, with which to set the unrealized currently operating modes. For greater distinctness, at embezzlement of **d.03** any of the values marked "reserved" in practice has realized mode 0 (speed control).

- ***Parameter d.04 - Threshold of fan switch-on***

The fan (if such is available in the article) is switching on when the temperature is increased above the threshold of actuation and then switching off when it falls below the specified in **d.04**. When increasing the value of **d.04** the temperature threshold of switching on the fan is decreased. If **d.04** is set to maximum value (1.00), the fan will be permanently switched on.
Adjustment range: 50-130℃ (60℃)

- ***Parameter d.05* - Activating of protections**

Activating of protections command word

bit 3	*bit 2*	*bit 1*	*bit 0*
Reserved	Reserved	0 - switched off	0 - switched off
		1- switched on	1- switched on

Protection against interruption of output phase during rotation – bit 1
By setting of bit 0=1 it is activated protection against interruption of output phase during rotation. By setting of bit 0 = 0 the protection is switched-off.

This protection protects the motor from damage in cases, when:
- The output frequency is higher than the basic – above 50/60Hz and the chosen duty mode is U/f. In this case the current, flowing between two other phases is not enough to activate the protection from overloading of inverter.
- There is a circuit closer on the output circuit.

This can happen in lift mechanisms, where between the inverter and the motor there is obligatory contactor, from security point of view.

ATTENTION

The protection must be switched-on, when the inverter is used to control lift. The damage of contactor lamellas during lift movement can cause serious trouble!

Protection against interruption of output phase in "DC-brake" mode – bit 0
- By setting of bit 1 = 1 it is activated protection against interruption of output phase in "DC-brake" mode;
- By setting of bit 1 = 0 the protection is switched-off;

This protection is recommended to be used, when there is contactor in the output circuit between inverter and motor and it is used in stop regime DC-brake. By switch-off of contactor, connected in the output circuit, during the work of DC brake, it is created electrical arc, which can set it in fire and cause serious damages.

ATTENTION

The protection must be switched-on, when the inverter is used to control lift with switched-on regime for stop DC-brake.

- ***Parameter d.06***

Configuring of common parameters becomes by the four bits of control word.

Table 9.8. Control word

bit 3	***bit 2***	***bit 1***	***bit 0***
Reserved for future use (unused)	Type of analog speed reference	Sequence of UVW-signals	Sequence of signals from the incremental encoder

Description of control word:

bit 3 - Reserved for future use (unused)

bit 2 - Chosing a type of analog speed reference

If the differential analog input is set to function "Speed reference" (analog input function 65), then by **bit 2** is chosen whether this analog reference is unipolar or bipolar. When inserting **bit 2** = 0 assignment is unipolar (number without sign regardless of the polarity of the signal), if it is necessary configure additional digital input to set the direction of rotation. When inserting the **bit 2** = 1 assignment is bipolar, the direction of rotation is determined by the polarity (sign) of the input signal.

bit 1 - Sequence of UVW-signals from encoder (if available)

Bit 1 is used to manage the synchronous motor with the help of encoder with UVW - outputs. In case that it is necessary to change the sequence of UVW-signals, this can be performed either by physical connection (crossing), and by inverting the **bit 1**.

bit 0 - Sequence of signals from the incremental encoder (if available)

In case that it is necessary to change the order of the outputs (A, B) of the incremental encoder to ensure the phasing of the speed feedback, this can be performed either by physical connection (crossing), and by inverting the **bit 0**.

ATTENTION

When you change the polarity of the feedback is necessary for the motor to be uncoupled from the mechanism which drives. It must be ensured that this will not lead to an accident. It is recommended to change it when the engine stopped.

The management of the inverter can be done both through multifunction digital and / or analog inputs, and through serial (MODBUS) interface. Version of control through serial interface and control through the control panel, which is also connected to the inverter via the serial port.

The general principle is that if a function (command) is configured on a multifunctional input, the same function / command can not be fed through the serial interface or the command panel. Conversely, if a function (command) is not associated with any of the multifunction inputs, it can be submitted via the serial interface or the command panel.

Example:

- Let digital function "Start / Stop" (function **2**) is configured to multifunctional Input # 3. Then the drive is starting / stopping vie Input # 3. If the commands “Start / Stop”, be submitted via the serial interface or the command console, they are ignored.
- if digital function “Start / Stop”(function **2**) is not configured to any of the multifunction inputs, then the the drive is starting / stopping of the serial interface or via the command console.

The options for control (the commands "Start / Stop" and "Direction") by multifunctional inputs via control terminal are:

Two-wire scheme for “Start” and “Stop” of inverter.
The factory setting mode implements a 2-wire scheme. At input **CN2-4** and **CN2-12** are assigned functions **2** (**ON**) and **3** (**F / R**).

After turning on the input **CN2-4** the inverter starts with the direction of rotation **Fwd**. After disconnecting the input, the inverter stops controllable or momentum depending on the choice.

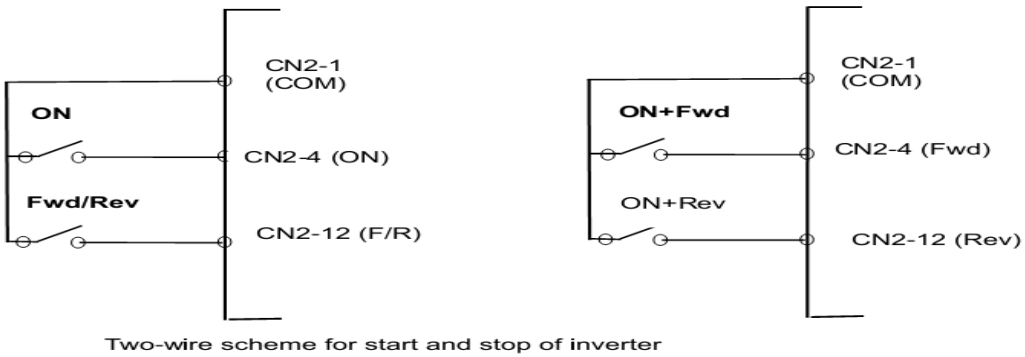

Two-wire scheme for start and stop of inverter

Figure 9.6. Two-wire scheme for "Start" and "Stop" of inverter

After turning on the input **CN2-4** and activate the input **CN2-12** is executed command reverse (Rev). - the inverter stops controllable and reverses the rotation of the motor (Rev). The wiring diagram is shown in *Figure 9.6*.

During the assignment at input **CN2-4** and **CN2-12** functions 4 (Run Left)) and 5 (Run Right), the starting and stopping is in the following sequence:

After turning on the input **CN2-4** the inverter starts with the direction of rotation **Fwd**. After disconnecting the input, the inverter stops controllable or momentum depending on the choice.

Three-wire scheme for "Start" and "Stop" of inverter.

At inputs **CN2-4**, **CN2-12** and **CN2-13** are assigned functions 4 (Run Left), 5 (Run Right) and 1 (run). Starting and stopping is in the following sequence.
To turning on the inverter must be enabled input **CN2-13** which is assigned to the function 1 (run).

After turning on the input **CN2-4** the inverter starts with direction of rotation **Fwd**. The exclusion is when you switching off the input **CN2-13**.

After turning on the input **CN2-12** the inverter starts with direction of rotation **Rev**. The exclusion is when you switching off the input **CN2-13**. On *Figure 9.7.* is shown the wiring diagram.

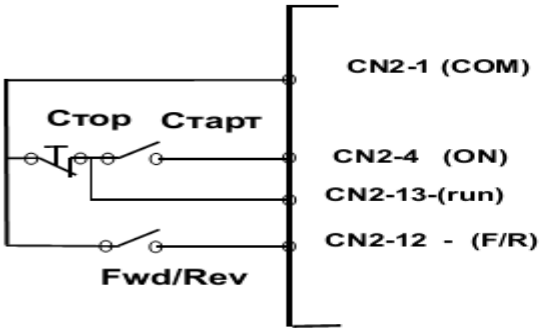

Three-wire scheme for start and stop of the inverter.

Figure 9.7. Three-wire scheme for "Start" and "Stop" of inverter

- ***Parameter d.07* - Recording / restoring the values of configuration parameters**

The parameter **d.07** serves mainly to record the complete configuration in the permanent (flash) memory of the inverter, as well as to restore the saved configurations.

When the inverter is powered up, the configuration parameters which determine the behavior of the drive are in energy-dependent operative memory (RAM).

After turning off the power supply, all parameters of the current configuration is automatically saved in non-volatile memory (FLASH).

When the power supply is turned on, all parameters of non-volatile memory (FLASH) are copied into operational memory. This restores the configuration of the inverter before the last power-off. This is called "**automatic configuration**", which is recording and restoring automatically without external command.

When changing some configuration parameters may lead to undesired behavior of the drive compared to condition before the start of the changes. In case that there are many changes, the recovery "by memory" on the last working configuration may be impossible. To provide a way out of this difficult situation, there is an opportunity to record the "**backup configuration**“. This configuration is stored in a separate area of flash memory so that it does not change the automatic recording of the current configuration after turning off the power supply.

It is recommended after changing configuration parameters and achieving well functioning configuration, this configuration to be saved as a "reserve“. This is done when **d.07** is set value **2**: **d.07** = **2** (after saving the configuration, the value of **d.07** automatically returns **0**). So the recorded backup configuration remains unchanged until it is overwritten as described above. Copying the backup configuration of flash memory in operational memory becomes as **d.07** is set value **1**: **d.07** = **1**.

The current configuration can also be saved to flash memory not only automatically (when turning off the power supply), but forced - as at **d.07** is set value **3**: **d.07** = **3**.
Besides described three main functions of **d.07**, this parameter can be used to reset the records in flash memory offset of the absolute encoder (if available) to the rotor of the motor.

This may be necessary when replacing the motor or encoder using a synchronous motor. The reset of the offset force the execution of the operation "orientation of the rotor" in next command "Start" followed by recording the new offset in flash memory. The reset of the offset became as **d.07** is set value **4**: **d.07** = **4**.

Note: Each of the described operations can be activated only in inactive state of the inverter - after power on the power supply or after command "Stop”.

- ***Parameter d.08 - Selection of specialized program***

There are selected specialized programs, developed for concrete applications.
Each specialized program realizes automated control of the drive by defined algorithm, by which can be avoided the necessity for use of external system for automated control of corresponding technological process.

This parameter has to possible values:
0: Ordinary universal drive;
1: Specialized system for automated control **of pumps;**

Table 9.9. Multifunctional inputs

9.5 Menu 4 (E) - Multifunctional inputs

№	Parameter	Explanation	MODBUS address	Range		Factory setting
E.00	Inp1 func	Multifunctional Digital/Analog input 0 (-**AI1 /CN2-6, +AI1/CN2-7)**	0x0400	0 - 172	-	0
E.01	Inp2 func	Multifunctional Digital/Analog input 1 (**AI2U /CN2-9)**	0x0401	0 - 172	-	0
E.02	Inp3 func	Multifunctional digital input 2 (**ON/CN2-4)**	0x0402	0 - 120	-	2
E.03	Inp4 func	Multifunctional digital input 3 (**F/R/CN2-12)**	0x0403	0 - 120	-	3
E.04	Inp5 func	Multifunctional digital input 4 (**DI1/CN2-13)**	0x0404	0 - 120	-	12
E.05	Inp6 func	Multifunctional digital input 5 (**DI2/CN2-14)**	0x0405	0 - 120	-	13
E.06	Inp7 func	Multifunctional digital input 6 **(DI3/CN2-10)**	0x0406	0 - 120	-	14
E.07	Dg.Pot.Step+	Digital potentiometer – step for increasing	0x0407	0,0 - 31,9	Hz	1.0
E.08	Dg.Pot.Step-	Digital potentiometer – step for decreasing	0x0408	0,0 - 31,9	Hz	1.0
E.09	DgPotRamp+	Digital potentiometer – speed for increasing	0x0409	0,0 - 31,9	Hz/ sec	0.0
E.10	Dg.PotRamp	Digital potentiometer – speed for decreasing	0x040A	0,0 - 31,9	Hz/ sec	0.0
E.11	PI-Reg kP	External **PI**-regulator - Proportional coefficient of amplifying (P)	0x040B	0 - 9999	-	0
E.12	PI-Reg kI	External **PI**-regulator - Integral coefficient of amplifying (I)	0x040C	0 - 9999	-	0
E.13	I/O-CmdWrd	Control word for multifunctional Inputs bit3: Reserv. bit 2: Reserv. bit 1: Reserv. bit 0: external PI bit 0: 0 – non active; 1 - active ***Note***: By activation of external **PI**-regulator, on some of analog inputs obligatory is assigned **function 72** (FB for external PI-regulator).	0x040D	0000 - 0001	-	0
E.14	FastInpMode	Operating mode of fast digital inputs	0x040E	0 - 4	-	0

Table 9.10. Functions of digital / analog inputs

Functions of digital / analog inputs		
Number of the function	***Name of the function***	***Type of the function***
0	Non-congigured (no input function assigned)	**Digital**
1	Emergency Stop	
2	Start of inverter (On/Off)	
3	Change of rotation direction (Forward/Reverse)	
4	Start with rotation direction – left (Run Left)	
5	Start with rotation direction – right (Run Right)	
6	DC-brake	
7	Faults Reset	
8	Acceleration/deceleration - stop	
9	Reference of Boost 2	
10	Start of analog signal (Ana Start/Stop)	
11	Programmable output frequency - F1	
12	Programmable output frequency - F2	
13	Programmable output frequency - F3	
14	Electronic potentiometer – increase of frequency	
15	Electronic potentiometer – decrease of frequency	
16	Programmable current limitation 1	
17	Programmable current limitation 2	
18	Enable the additional "**P**" - coefficient of speed regulator	
19	Position reference – prohibition/permition	
20	Position reference – reset	
65	Reference for frequency (speed)	**Analog**
66	Feedback fore speed	
67	Reference for limitation of the moment	
68	Reference for acceleration (not active)	
69	Level of DC-brake	
70	Level of current limitation by acceleration	
71	Level of current limitation by stop	
72	Feedback for external PI-regulator	

9.5.1 Polarity of multifunctional inputs

Numbers with which are assigned the functions of multifunctional inputs correspond to "positive" polarity. This means:

- for **digital** input functions – active state in closed contact inactive state in open contact;
- for **analog** input functions (of differential input) – at positive potential on input "+" compared to input "-", the input signal is perceived as positive, in the opposite case - as negative;

In case of necessity, the polarity of the input functions can be inverted without physical change in the input compounds. This happens as the number, corresponding to an input function, is increased with displacement equal to **100**.

For example, if digital input is configured function **2** (Start / Stop), the command "Start" will be submitted by close contact and "Stop" - through open contact. The inverting of this logic is implemented as on the same input is assigned function **102** (instead **2**). Then the command "Start" will be fed through an open contact and "Stop" - through closed contact.

The same principle is valid for bipolar analog input functions, such as the replacement of function **65** (analog speed reference) with **165** leads to a change in the specified direction of rotation.

9.5.2 Using the fast digital inputs

Two of the multifunction digital inputs are characterized by a high performance and can accept input signals at a frequency up to 200 kHz. One of the two "fast" inputs is conventionally accepted as "Main" and the other for "Auxiliary".

The „**Main**“ fast input is **DI3**, изведен е на контролна клема CN2-10. Конфигурирането на функции на този вход става чрез параметър **E.06.**

„**Спомагателният**“ бърз вход е **DI1**, outputted on the control terminal **CN2-13**. The configuration of features of this input is through a parameter **E.05.**

On **fast digital inputs** can be configured each of the input digital functions in which these inputs will behave as normal digital inputs.

The higher performance of fast digital inputs enables them to perform functions unavailable to other inputs. For the purpose:

- on parameters **E.05 and/or E.06** , whereby are configured functions of fast digital inputs are assigned a value of **0** (no set input feature);
- by parameter **E.14** is defined the operating mode of one or both fast digital inputs;

The operating modes of the fast digital inputs are explained in the table below:

Table 9.11. Operating modes of the fast digital inputs

Operating modes of the fast digital inputs	
Identifier	***Description of the mode***
0	The inputs are not used as "fast" inputs
1	Reference for **speed** with Pulse Width Modulation (**PWM**) with frequency **up to 1.0 kHz**. Only one (Main) fast input is used. The second fast input can work as a simple digital input.
2	Reference for **position** type „**Step + Direction**“. The main fast input is fed with pulse sequence up to 200 kHz, the auxiliary fast input serves to set the direction
3	Reference for **position** with two **square pulse sequences**. The fast inputs are fed with pulse sequences up to 200 kHz in square (phase shifted 90 degrees)
4	Reference for **position** with **separate pulse sequences for both directions of rotation**. This mode of operation of the fast inputs is not enabled.

Note: When at parameter **E.14** is configured “set a position”, by parameter d.03 must be chosen mode of "**Control by reference for position“** (**d.03 = 2**) from general settings.

9.5.3 Functions of digital inputs – detailed description

Table 9.12. Functions of digital inputs – detailed description

№	Name	Description
0	Not configured	Not assigned input function
1	Emergency Stop	This function performs fast stop of the motor and switch-off of inverter by activating of digital input. The stop tempo is specified in **H.02** ***Note*:** When necessary the fast stop, it must be mouinted a suitable brake resistor on the output terminals of the inverter
2	Start (On/Off)	The function provides start of the inverter. ***Note**:* At simultaneously set of the mutually exclusive pairs functions **2/3**(Start/Stop+Direction) and **4/5**(Start with the left direction/ Start with the right direction), is perceived the second type of control - Start with the left direction/ Start with the right direction)
3	Change of direction of rotation	The function secures the change of direction of rotation of the motor. See above the note to fuction 2.
4	Start with direction of rotation – left (Run Left)	The function secures the start of inverter and rotation of the motor in direction – left. See above the note to fuction 2.
5	Start with direction of rotation – right (Run Right)	The function secures the start of inverter and rotation of the motor in direction – right. See above the note to fuction 2.
6	DC-brake	By activating the input, announced for DC-brake of the motor, it is supplied DC voltage or DC currect depending of the choice in **q.06** – bit 3. - By choice **q.06** – bit 3=0 it is supplied output voltage in percents from nominal motor voltage - By choice **q.06** – bit 3=1 it is supplied output current in percent from nominal current The values of output DC voltage or current are specified depending of the choice in **q.06** – bit 2 - By choice **q.06** – bit 2 =0 the value of output DC voltage or current is specified in parameter **q.06 =** XX - By choice **q.06** – bit 2 =1 1 the value of output DC voltage or current is specified in parameter from analog voltage supplied of one of two analog inputs, which is announced as input for brake control (**E.00**=69, or **E.01**=69). The scale is specified in parameter **q.00**, and range of reference regulation – from parameters on analog input - **g.02** or **g.05** The exit from regime **DC-brake** becomes by**:** - Switch - Activating of digital input, announced for specifying the output frequency. From analog input, announced to specify the output frequency. The initial frequency, form which it starts, is specified from the threshold for activating the analog input with parameter **n.03** By switch-off of digital input the entering in regime **DC-brake** becomes by: - Arriving the output frequency, specified in parameter **q.03** (by n.01= 0) - Immediately, when parameter **n.01** = 1 After expiry of time, , specified in **n.06**, when parameter **n.01** =2 The functioning of **DC-brake** by Fref reference from digital inpit with activated time for - **ton** and - **toff** is shown on *Figure 9.8*.

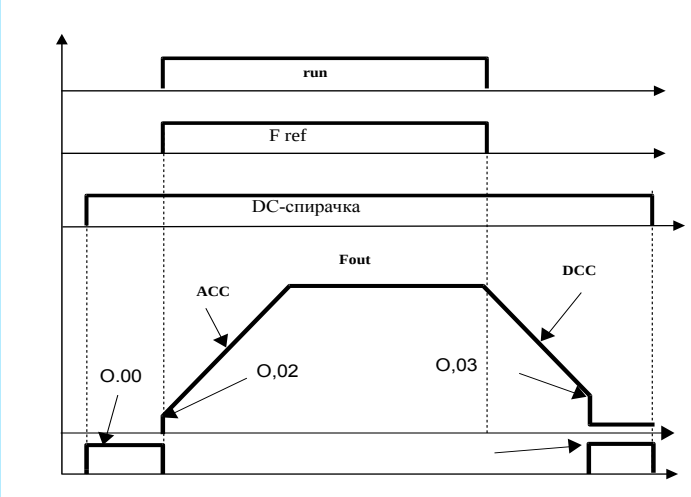

Figure 9.8

7	Protection reset	***Note**:* The function is not active.
8	ACC/DCC- stop	By activating of digital input it is stoped the increase, respectively – it is stoped the decrease of the output frequency during acceleration and stop of the motor (*Figure 9.9.*) By switch-off on the input, the process of acceleration and stop of the motor continues.
9	Reference for Boost2	***Note**:* The function is not active.
10	Start from analog signal (Ana Start/Stop)	***Note**:* The function is not active.
11 12 13	Programmable frequency - F1 Programmable frequency - F2 Programmable frequency - F3	By activating of 3 digital inputs, choosen to specify the frequency, can be specified in total 7 different frequencies, depending on the combinations of switching. The fixed frequencies are entered with parameters from **A.02** to **A.08**.

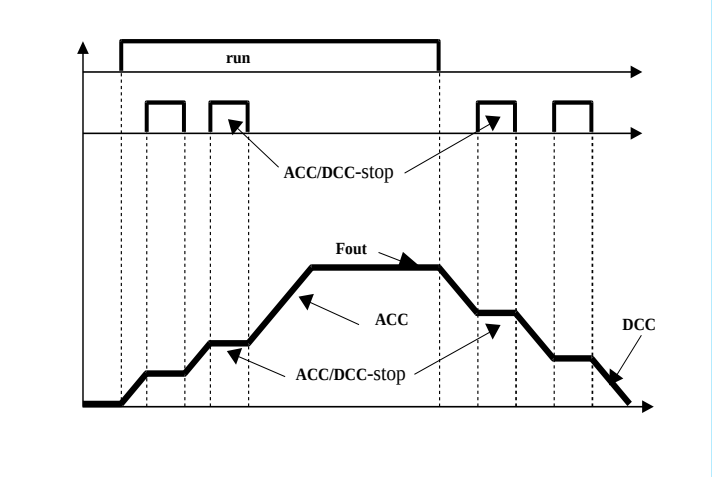

Figure 9.9.

Table: Choice of fixed frequency

Parameter	***Symbol***	***F3***	***F2***	***F1***
A.02	Programmable frequency (Ref1)	**-**	**-**	**on**
A.03	Programmable frequency (Ref2)	**-**	**on**	**-**
A.04	Programmable frequency (Ref3)	**-**	**on**	**on**
A.05	Programmable frequency (Ref4)	**on**	**-**	**-**
A.06	Programmable frequency (Ref5)	**on**	**-**	**on**
A.07	Programmable frequency (Ref6)	**on**	**on**	**-**
A.08	Programmable frequency (Ref7)	**on**	**on**	**on**

on – activated input

<table>
<tr><td></td><td></td><td>Note: At simultaneously configured digital (with functions 11, 12, 13) and analog reference source for frequency (speed), is implemented digital reference if at least one of these digital inputs is submitted active level (‘on’). The analog reference is executed when all digital sources of reference were in an inactive ('off') state.</td></tr>
<tr><td>14</td><td>Electronic potentiometer – Increase of the frequency</td><td>This function ensures step increase of output frequency by activating of digital input
The step for increase of the reference is specified in parameter E.07.
The speed of increase of the reference is specified in parameter E.09</td></tr>
<tr><td>15</td><td>Electronic potentiometer – Decrease of the frequency</td><td>Secures step decrease of output frequency by stop of the inverter.
The step of decreasing of the reference is specified in E.08.
The speed of decrease of the reference is specified in parameter E.10.</td></tr>
<tr><td>16
17</td><td>Programmable current limitation – L2, L1</td><td>By activating one or two digital inputs, choosen as inputs for specifying the current limitation, can be specified in total 3 different levels. The fixed values are entered in parameters from I.03 to I.05 as percent from maximal current limitation.
Table: Choice of fixed current limitations
<table>
<tr><th>Parameter</th><th>Symbol</th><th>L2</th><th>L1</th></tr>
<tr><td>I.03</td><td>Programmable current limitation Ref1</td><td>-</td><td>on</td></tr>
<tr><td>I.04</td><td>Programmable current limitation Ref2</td><td>on</td><td>-</td></tr>
<tr><td>I.05</td><td>Programmable current limitation Ref3</td><td>on</td><td>on</td></tr>
</table>
on – activated input</td></tr>
<tr><td>18</td><td>Enable the additional "P" - coefficient of speed regulator</td><td>At active level at the input, on which is configured digital input function 18, the main „P“- coefficient (J.00) of PID-speed regulator is replaced by the Additional „P“- coefficient (J.01).</td></tr>
<tr><td>19</td><td>Prohibition / permition of the position reference</td><td>This function forbids receiving of position reference:
By activating of digital input, for which the function is announced, the inverter doesn’t execute the specified position, locks the entrance of pulses for the reference, which are supplied on the input of the position regulator.
By switching-off of the input, the inverter can execute the referenced position.</td></tr>
<tr><td>20</td><td>Position reference - reset</td><td>By activated digital input, to which the function is announced, the running position is nulled. By switch-off of the input, the inverter executes the specified positionagainst the initially specified (null) position.</td></tr>
</table>

9.5.4 Functions for analog inputs – detailed description

Table 9.13. Functions for analog inputs – detailed description

№	Name	Description
65	Reference for speed (frequency) by analog input	The function is used, when the reference for frequency is supplied on analog input as voltage or from potentiometer. The reference can be voltage 0 - +10V or current 0/4-20mA. The parameters on analog input are specified in **g.** ***Note:*** 1. The function “reference for frequency” can be assigned on one analog input only. Otherwise an error CFG appears “Wrong configuration“. 2. The reference for frequency can be combined – from digital and from analog input, as priority have the digital inputs. 3. The reference can be bipolar 0-+/-10V in case it is used a differential in put AI1. The direction of rotation is defined from the polarity on the input. 4. When a parameter d.06 (from "General Settings") analog speed reference is configured as bipolar, digital function 3 ("Direction of rotation") is ignored.
66	Feedback by speed by analog input	The function is used when the speed feedback is an analog signal (tachometer)
67	Reference for torque limitation by analog input	The function is used, when it is necessary to limit the torque of the motor from analog input. The reference can be voltage 0 +10V or current 0/4-20mA on the analog input. ***Note:*** The function is active in a method of control: **„Vector control with feedback”**
68	Reference for acceleration by analog input	***Note****:* The function is not active.
69	Reference for the level of DC-brake by analog input	The function is used, when it is necessary to control the level of DC-brake by analog input. ***Note*****:** To work this function it is necessary to be configured correctly **O.XX – “** Parameters of DC-brake ”
70	Reference for the level of current limitation during acceleration by analog input	The function is used, when it is necessary to limit the level of the current (respectively the torque) during acceleration of the motor, when the reference is from analog input. ***Note****:* The function is not active.
71	Reference about the level of current limitation during stop by analog input	The function is used, when it is necessary to limit the current (respectively the torque) during established speed of the motor, when the reference is from analog input. ***Note****:* The function is not active.
72	Feedback for external **PI** - regulator	This function is used when the frequency inverter also serves as a programmable controller (**PLC**), receives assignment (temperature, flow, pressure, etc.) feedback. by relevant sensor and through PI regulator set value is stabilized by controlling the motor speed. To activate this input function, it is necessary: 1. In the control word for multifunctional inputs (parameter **E.13**) to be configured external **PI**-regulator. 2. Function **72** to be assigned on one of multifunctional analog inputs. The adjustment of parameters of PI-regulator is done with parameters: **I.18 - External PI-regulator –** proportional coefficient of amplification (**P**) **I.19 – External PI-regulator –** integral coefficient of amplification (**I**) ***Note*****:** By activation of special program for pump control, (**d.08** = 1) it is automatically configured for use of external **PI**-regulator.

Table 9.14. Multifunctional outputs

9.6 Menu 5 (F) - Multifunctional outputs

№	Parameter	Explanation	MODBUS address	Range		Factory setting
F.00	IoOut1 Func	Function of digital/analog output AO1	0x0A00	0 - 14	-	4
F.01	IoOut2 Func	Function of digital/analog output AO2	0x0501	0 - 14	-	8
F.02	IoOut3 Func	Function of digital output [FL]	0x0502	0 - 8	-	1
F.03	IoOut4 Func	Setting function on digital output [RUN]	0x0503	0 - 8	-	2
F.04	Z-Speed/rpm	Zero speed	0x0504	1 - 120	Hz	30
F.05	ZS-Hyst rpm	Hysteresis at zero speed	0x0505	1 - 60	Hz	12
F.06	SA-Hyst rpm	Hysteresis at arrived speed	0x0506	1 - 60	Hz	12
F.07	SA-Zone rpm	Zone of arrived speed	0x0507	1 - 60	Hz	12
F.08	Timer Start	Timer by start	0x0508	0-32000	ms	0
F.09	Timer Stop	Timer by stop	0x0509	0-32000	ms	0
F.10	ZeroSpdMode	Operating mode at “Zero speed” and “Speed Arrival” **0** – from speed feedback **1** – from speed reference	0x050A	0 - 1	-	0
F.11	ModeAnaOut	Operating mode of analog outputs bit 3 / bit 2 / bit 1 / bit 0 - / - / Analog out. 2 / Analog out.1 - / - / 0 - bipolar / 0-bipolar - / - / 1-unipolar / 1-unipolar	0x050B	0 - 3	-	0
F.12	GainAnaOut1	Amplification on analog output 1	0x050C	0.000-1.000	-	1.000
F.13	OfstAnaOut1	Offset on analog output 1	0x050D	-0.400-0.400	-	0.000
F.14	GainAnaOut2	Amplification on analog output 2	0x050E	0.000-1.000	-	1.000
F.15	OfstAnaOut2	Offset on analog output 2	0x050F	-0.400-0.400	-	0.000

Table 9.15. Functions of digital / analog outputs

Functions of digital / analog outputs		
Number of the function	***Number of the function***	***Number of the function***
0	Non configured (there is no preset function)	Digital
1	Ready	
2	Zero Speed	
3	Speed Arrival	
4	Start-Stop	
5	DC-brake(the brake is activated)	
6	Low current limitation	
7	High current limitation	
8	Timer start-stop	
9	DC-voltage	Analog
10	Phase current	
11	Motor speed	
12	Output frequency of inverter	
13	Output of speed regulator	

9.6.1 Polarity of digital outputs

The numbers with which are assigned functions of multifunctional digital outputs correspond to "positive" polarity. This means that when activated digital function the corresponding output contact is closed and reverse - for non-activated digital function, the starting contact is open.

In case of necessity, the polarity of the output functions can be inverted without physical modification of the starting compounds. This happens as the number, corresponding to an input function, is increased with displacement equal to **100**.

For example, if a digital output is configured output function 1 ("Ready"), then when the inverter is able "Ready" the starting contact is closed. Inverting this logic is implemented as the same output assign function **101** (instead **1**). Then the state "Ready" will be indicated by an open contact and the absence of "Ready" - through closed contact.

9.6.2 Functions of digital outputs – detailed description

Table 9.16. Functions of digital outputs - detailed description

№	Name	Description
0	Non configured	The output is not configured
1	Ready	Digital output is switched-on, when there is protection triggered. The inverter is ready for operation
2	Zero Speed	Digital output is switched-on, when the reference for output frequency or the speed feedback signal (depending on the choice of parameter **F.10**) is bigger that the referenced in **F.04** value
3	Speed Arrival	The digital output is switched-on, when the output frequency becomes higher or smaller than the referenced (respectively the signal for feedback) and it is switched-off when the output frequency arrives the referenced +/- hysteresis, preset in **F.06** (*Figure 9.10*) 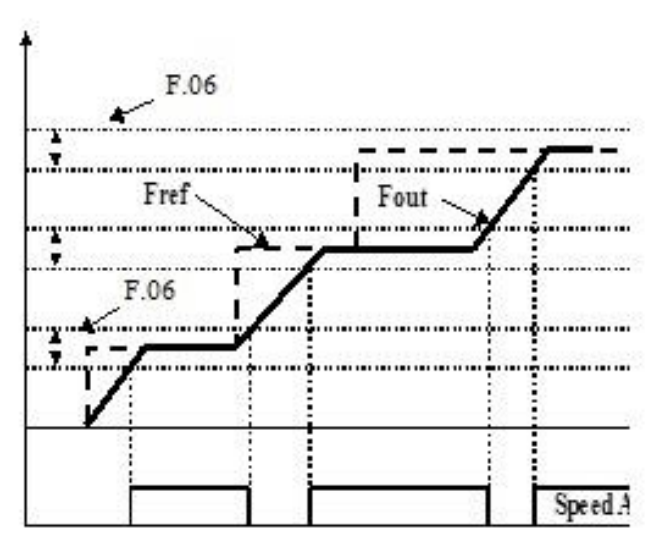 *Figure 9.10.*
4	Start-Stop	The digital output is switched-on, when the output frequency becomes higher or smaller than the referenced (respectively the signal for feedback) and it is switched-off when the output frequency arrives the referenced +/- hysteresis, preset in
5	DC-brake (brake is activated)	The digital output is switched-on, when the DC-brake is activated (*Figure 9.11*)**.**

		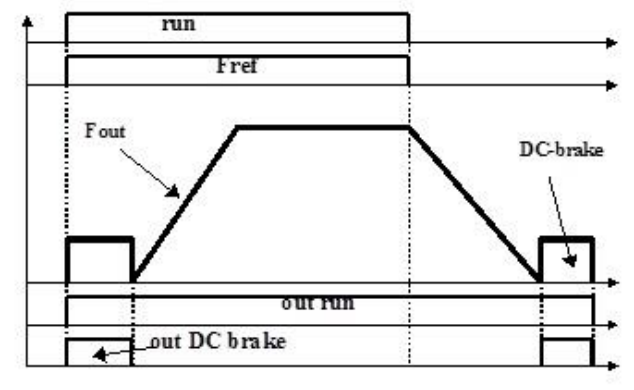 *Figure 9.11*
6	Low current limitation	The digital output is switched-on, when the inverter is in current limitation by acceleration preset in **I.00** and it is switched-off by exiting the current limitation (*Figure 9.12*) 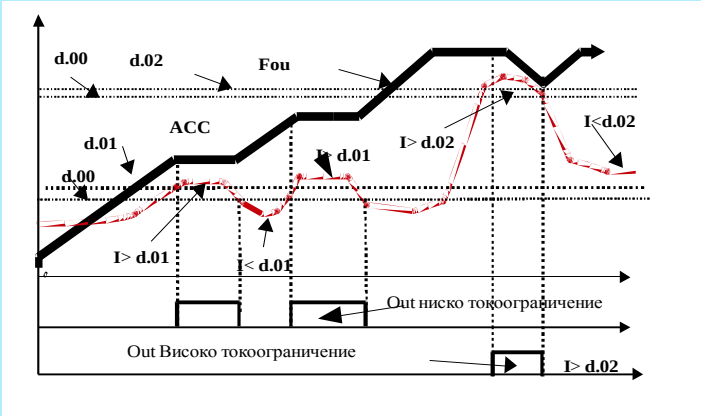 *Figure 9.12*
7	High current limitation	The digital output is switched-on, when the inverter is entered in high current limitation, specified in **I.01** during acceleration or in established regime and it is switched-off by exting the current limitation.
8	Timer Start-Stop	The digital output is switched-on, after run out of the time preset in **F.08** (Timer Start) by given command for starting the inverter. The digital output switches-off after run out of the time preset in **F.09** (Timer/Stop) when the output frequency (reference for output frequency) becomes = 0 Hz 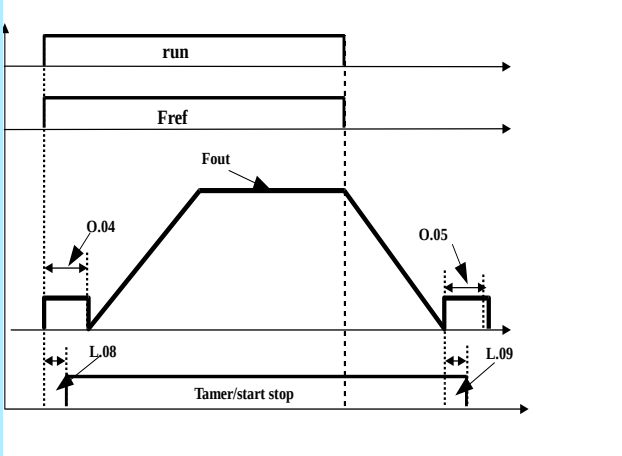 *Figure 9.13* ***Note*:** This function is suitable for control of mechanical brake for lifts and cranes.

9.6.3 Functions of analog outputs – detailed description

Table 9.17. Functions of analog outputs - detailed description

<table>
<tr><th>№</th><th>Name</th><th>Description</th></tr>
<tr><td>9</td><td>DC-voltage</td><td>Analog value is proportional to the voltage of DC bar of the inverter.
The zero of the voltage corresponds to Table 9.18:
Table 9.18.
<table>
<tr><td>Output type</td><td>0.0mA to 20 mA</td><td>4.0mA to 20 mA</td><td>Voltage</td></tr>
<tr><td>Unipolar</td><td>0,0mA</td><td>4,0mA</td><td>0,0V</td></tr>
</table>
The range - 0mA to 20 mA (4mA to 20 mA) corresponds to 800V/DC</td></tr>
<tr><td>10</td><td>Phase current</td><td>Analog value is proportional to the phase current. Zero of phase current corresponds to Table 9.19:
Table 9.19.
<table>
<tr><td>Output type</td><td>0.0mA to 20 mA</td><td>4.0mA to 20 mA</td><td>Voltage</td></tr>
<tr><td>Unipolar</td><td>0,0mA</td><td>4,0mA</td><td>0,0V</td></tr>
<tr><td>Bipolar</td><td>10mA</td><td>12mA</td><td>2,50V</td></tr>
</table>
The range - 0mA to 20 mA (4mA to 20mA) corresponds to 2. Inom.</td></tr>
<tr><td>11</td><td>Motor speed</td><td>Analog value is proportional to the real speed of the motor measured from speed feedback sensor. The zero speed corresponds to values in Table 9.19:
The range - 0mA to 20 mA (4mA to 20 mA) corresponds to the maximal speed.
Note: In case the selected control mode is without speed feedback, the signal is proportional to the speed reference, but not to the real speed.</td></tr>
<tr><td>12</td><td>Output frequency of inverter</td><td>Analog value is proportional to the frequency at the output terminals of inverter.
The range - 0mA to 20 mA (4mA to 20 mA) corresponds to the maximal speed.</td></tr>
<tr><td>13</td><td>Output of the speed regulator</td><td>Analog value is proportional to the output of the speed regulator. Regulator's zero corresponds to Table 9.19:
The range - 0mA to 20 mA (4mA to 20 mA) corresponds to the maximal value on the output of speed regulator.
Note: The output signal is different from zero, only by configured control mode with speed feedback.</td></tr>
</table>

***Note*:** When the analog output is voltage, it it necessary to mount resistor 250Ω between it and output GND.

The values of parameters **F**.12 - **F**.15 are adjusted depending on the choice 0,0 - 20,0mA 4,0 -20mA or voltage output (with assembled resistor 250Ω) They are specified in *Table 9.20*.

Table 9.20. Scaling the analog outputs

Parameter	*Name*	*Current output 0-20mA*	*Current output 4.0-20,0mA*	*Voltage output 0-5,0V*
F.12	Amplification output 1	1.000	1.000	1.000
F.13	Offset on output 1	0,000 +/- 0,002	0,200 +/- 0,002	0,000 +/- 0,002
F.14	Amplification output 2	1.000	1.000	1.000
F.15	Offset on output 2	0,000 +/- 0,002	0,200 +/- 0,002	0,000 +/- 0,002

Table 9.21. Configuring of analog inputs

9.7 Menu 6 (g) - Configuring of analog inputs

№	Parameter	Explanation	MODBUS address	Range		Factory setting
g.00	LogLevel-Lo	Voltage, under which the signal is considered log. ‘0’ (when the input is digital)	0x0600	0.050–0.200	-	0.150
g.01	LogLevel-Hi	Voltage, above which the signal is considered log. ‘1’ (when the input is digital)	0x0601	0.250-0.600	-	0.300
g.02	GainAnaInp1	Gain on analog input AI1	0x0602	0.000–4.000	-	1.00
g.03	OfstAnaInp1	Offset on analog input AI1 (Od1)	0x0603	-9999 +9999	-	0
g.04	GainAnaInp2	Gain on analog input AI2V (Gd2)	0x0604	0.000- 4.000	-	1,00
g.05	OfstAnaInp2	Offset on analog input AI2V (Od2)	0x0605	-9999 +9999	-	0
g.06	RefDeadBand	Zone of insensitiveness of analog inputs	0x0606	0.000 –0.200	-	0.00

Table 9.22. Temp of acceleration and braking

9.8 Menu 7 (H) - Temp of acceleration and braking

№	Parameter	Explanation	MODBUS address	Range		Factory setting
H.00	RampAcc .1s	Positive acceleration from 0 to Fmax	0x0700	0 - 32760	0.1s	50
H.01	RampDcc .1s	Negative acceleration from Fmax to 0	0x0701	0 - 32760	0.1s	50
H.02	RampEmg .1s	Tempo in emergency stop (dccE)	0x0702	0 - 32760	0.1s	50
H.03	I-Lim Ramp	Negative acceleration in regime of high torque limit (U/f)	0x0703	10 - 1000	0.1s	100
H.04	S-ramp Acc1	S1 – radius of arc 1 (by acceleration)	0x0704	0.000–0.500	-	0.010
H.05	S-ramp Acc2	S2 – radius of arc 2 (by acceleration)	0x0705	0.000–0.500	-	0.010
H.06	S-ramp Dcc1	S3 – radius of arc 3 (by stop/decceleration)	0x0706	0.000–0.500	-	0.010
H.07	S-ramp Dcc2	S4 – radius of arc 4 (by stop/decceleration)	0x0707	0.000–0.500	-	0.010
H.08	S-ramp Ref0	Starting frequency by S-ramp	0x0708	0.000–0.500	-	0.000
H.09	S-ramp Acc2	Starting acceleration by S-ramp	0x0709	1 - 32760	0.1s	50
H.10	S-ramp Dcc2	Tempo of deceleration/stop by frequency 000.0Hz	0x070A	0 - 32760	0.1s	50
H.11	S-ramp Ctrl	Control of S-shaped ramp: **0**: S-ramp is not active **1-100**: Scale of S-ramp by time axes	0x070B	0 – 100	-	0

Table 9.23. Current limit

9.9 Menu 8 (I) - Current limit

№	Parameter	Explanation	MODBUS address	Range		Factory setting
I.00	IlimLo/Inom	Current limit – low level (about **U/f**)	0x0800	0.60 – 1.70	-	1.50
I.01	IlimHi/Inom	Current level – high level (U/f and VC+FB)	0x0801	0.60 – 2.00	-	1.80
I.02	ILimit Decr	Current limit in 2-nd zone (about U/f)	0x0802	0.50 – 0.90	-	0.75
I.03	ILim1/Inom	Fixed current limitation 1 (when activating a digital input function **16**)	0x0803	0.00 – 2.00	-	1.60
I.04	ILim1/Inom	Fixed current limitation 2 (when activating a digital input function **17**)	0x0804	0.00 – 2.00	-	1.60
I.05	ILim1/Inom	Fixed current limitation 3 (when activating a digital input functions **16** and **17**)	0x0805	0.00 – 2.00	-	1.60
I.06	Ovrld Timer	Timer protection from overloading	0x0806	500-32750	ms	5000

Table 9.24. Speed regulator

9.10 Menu 9 (J) - Speed regulator

№	Parameter	Explanation	MODBUS address	Range		Factory setting
J.00	Kp Spd Hi	Main **„P“-** coefficient of **PID** regulator	0x0900	0.000–1.000	-	0.125
J.01	Kp Spd Lo	Additional **„P“-** coefficient of **PID** regulator. It is used instead of the main coefficient after activation of a digital input function **18** („Additional **„P“-** coefficient“)	0x0901	0.000–1.000	-	0.037
J.02	Ki Spd Lo	**„I“-** coefficient of **PID** regulator of speed	0x0902	0.000-1.000	-	0.062
J.03	Kd Spd	**„D“-** coefficient of **PID** regulator of speed It is not used in the current version of the inverter.	0x0903	0.000-1.000	-	0.125
J.04	Ampl.Boost	Amplitude compensation of output voltage in function of the output of **PI** regulator by U/f with speed FB (APL)	0x0904	0.00 – 6.00	-	1.00
J.05	PsnRef. Scl	Scaling the position reference	0x0905	1 - 10	-	1
J.06	PsnFdb. Scl	Scaling the position FB	0x0906	1 - 10	-	1
J.07	PsnReg Gain	Position regulator gain	0x0907	0.25 - 2.00	-	1.00

Table 9.25. Vector control

9.11 Menu 10 (L) - Vector control

№	Parameter	Explanation	MODBUS address	Range		Factory setting
L.00	Kp Trq	**„P“**- coefficient of **PI** regulator of the torque	0x0A00	0.000–1.000	-	0.25
L.01	Ki Trq	**„I“**- coefficient of **PI** regulator of the torque	0x0A01	0.000–1.000	-	0.021
L.02	Kp Flx	**„P“**- coefficient of **PI** regulator of flux linkage / excitation	0x0A02	0.000–1.000	-	0.25
L.03	Ki Flx	**„I“**- coefficient of **PI** regulator of flux linkage / excitation	0x0A03	0.000–1.000	-	0.25
L.04	Flux Ref	Reference for stator flux linkage (Sensorless) or for excitation current (VC + FB)	0x0A04	0.050 –0.650	-	0.200

Table 9.26. Configuring Start / Stop mode

9.12 Menu 11 (n) - Configuring Start / Stop mode

№	Parameter	Explanation	MODBUS address	Range		Factory setting
n.00	OnCmd Mode	Starting mode **0** – starting from digital input with function“Run” **1** – starting from analog reference for frequency bigger than the preset threshold (**n.03**) and digital input “Run” **2** - starting from digital inputs - reference for frequency and activated digital input “Run”	0x0B00	0 – 2	-	0
n.01	SpdRef Mode	Speed reference mode **0** – the reference accepts all values **1** – the reference is bigger than the preset threshold (**n.04**)	0x0B01	0 – 1	-	0
n.02	Stop-Mode	Stop mode **0** - inverter stops under control **1** - inverter stops without control (by inertia) **2** - inverter stops uncontrolled with timer and DC-brake. ***Note*:** In Stop-modes **1** and **2** with timer it is forbidden restart (**n.05**)	0x0B02	0 – 2	-	0
n.03	Ref-Run Hz	Frequency at which the inverter starts (**n.00** = **1**)	0x0B03	0.0 - 30.0	Hz	0.0
n.04	Ref-Min Hz	Minimal frequency (**n.01** = **1**)	0x0B04	0.0 - 30.0	Hz	0.0
n.05	OnCmdDelay	Timer about prohibition for restart	0x0B05	0 - 32750	ms	0
n.06	DcBrk Delay	Timer delay of DC-brake (**n.02** = **2**)	0x0B06	0 - 32750	ms	1000
n.07	Ready Delay	Timer about prohibition for start by protection	0x0B07	0 - 32750	ms	0

Table 9.27. Communication

9.13 Menu 12 (o) - Communication

№	Parameter	Explanation	MODBUS address	Range		Factory setting
o.00	Baud / 100	Selection the speed on series port 9600, 19200, 38400, 57600, 115200. The value is entered without the last two nulls.	0x0C00	96 - 1152	baud /100	192
o.01	Parity	Parity control **0** – without parity control **1** – odd number of 1 **2** – even number of 1 in each symbol	0x0C01	0 - 2	-	2
o.02	Node ID	Identification of MODBUS node	0x0C02	1 - 247	-	1
o.03	Mbs.timescl	Time-out correction by MODBUS communication	0x0C03	0.100-1.900	-	1.000
o.04	ComTimeout	Protection timer from communication break-off	0x0C04	10 - 32750	ms	1000
o.05	Cmd.Wrd	Configures control through series port **bit 3 | bit 2 | bit 1 | bit 0** **bit 3 -** Reserved. **bit 2 -** Reaction by communication break-off through series port: **0** – only indication **1** – switch-off the drive **bit 1 -** Control through port 1 (control panel) **0** – forbidden* **1** – permitted **bit 0 -** Control through series port 0 (CN4) **0** – forbidden* **1** – permitted ***Note*:** The prohibition concerns only to commands start/stop, revers and speed reference. All other operations through the port are not influenced by it.	0x0C05	0 - 15	-	3

Table 9.28. Parameters of U/F

9.14 Menu 13 (P) - Parameters of curve U/F

№	Parameter	Explanation	MODBUS address	Range		Factory setting
P.00	Ustart/Umax.	Output voltage by Fout = 0 (PbL)	0x0D00	0.00 – 0.20	-	0.05
P.01	Uboost/Umax	Output voltage by Fboost (PbH)	0x0D01	0.00 – 0.25	-	0.05
P.02	Ubase/Umax	Output voltage by Fbase	0x0D02	0.25 – 1.00	-	1.00
P.03	Fboost/Fmax	Output voltage by Fboost (FbH)	0x0D03	0.000–0.500	-	0.02
P.04	Uboost Emrg	Coefficient of decreasing the output voltage at low speed in emergency mode. It is used in elevator drives at emergency power by UPS.	0x0D04	0.10 – 1.00	-	0.75

Table 9.29. Configuring DC brake

9.15 Menu 14 (q) - Configuring DC brake

№	Parameter	Explanation	MODBUS address	Range		Factory setting
q.00	Inten-Start	Intensity of DC-brake during start	0x0E00	0.00 - 1.00	%	0.1
q.01	Inten-Stop	Intensity of DC-brake during stop	0x0E01	0.00 - 1.00	%	0.1
q.02	StartFrq-Hz	Output starting frequency after DC-brake	0x0E02	0.0 - 30.00	Hz	0
q.03	StopFrq-Hz	Frequency by activating DC-brake during stop	0x0E03	0.0 - 30.00	Hz	0
q.04	Timer-Start	Timer of DC-brake during start	0x0E04	0 - 32750	ms	10
q.05	Timer-Stop	Timer of DC-brake during stop	0x0E05	0 - 32750	ms	10
q.06	Brk-Cmd.Wrd	Configuring parameters of DC-brake **bit 3** | **bit 2** | **bit 1** | **bit 0** **bit 3 - DC**-brake control mode **0** – voltage control **1** – current control **bit 2 -** Source for intensity reference **0** – from configuration parameter **1** – from analog input **bit 1 -** Control mode **0** – from timer and digital input **1** – digital input control **bit 0 -** Permission for DC-brake **0** – forbidden **1** – permitted	0x0E06	0 - 15	-	0

Table 9.30. Pump control

9.16 Menu 15 (r) - Pump control

№	Parameter	Explanation	MODBUS address	Range		Factory setting
r.00	Min.Current	Minimal current (for protection against operation of empty pump)	0x0F00	0.00 – 1.00		0.00
r.01	Press [atm]	Maximal pressure (for scaling the reference and pressure feedback)	0x0F01	0.00 – 30.00	atm	8.00
r.02	Aux To[sec]	Interval for switch-on of additional pump	0x0F02	0 – 600	sec	150
r.03	I_o To[sec]	Interval for switch-off the pump by zero consumption	0x0F03	0 - 600	sec	90

10 MODBUS communication

10.1 Supported functions of MODBUS protocol

The system supports MODBUS-functions with the following functional codes:

03 (0x03)	Read Holding Registers
04 (0x04)	Read Input Registers
05 (0x05)	Write Single Coil
06 (0x06)	Write Single Register
16 (0x10)	Write Multiple Registers

10.2 Addressing parameters and variables of the drive by MODBUS protocol

Each of described till now configuration parameters can be red/modified by standard functions of MODBUS protocol.

10.3 Addressing principle

Two-bite address for access to any configuration parameter is created like this:

- most significant bite is number number in the menu, to which belongs the parameter
- least significant bite is the index of the parameter in the menu

The addressing of interface variables of inverter all configuration parameters to be placed in no more than 32 menus (with numbers from 0 to 31) maximal number of 32 parameters (with numbers from 0 to 31) in each menu.

Except to configuration parameters, the inverter control system provides interface for access through MODBUS protocol to variables, organized on the same principle menu/parameter, not belonging to configuring parameters.

10.4 Addressing of parameters for visualization of drive's variables

Menu „Display” with number **32** (Hex **20**) contains and provides direct acces to all parameters for visualization, counted in description of parameter **b.00**. The address of each parameter consists of most significant bite, equal to index of Menu „Display” (32) and least significant bite – index of parameter from description of menu “display”. The parameters from menu “Display” are read-only.

10.5 Addressing of parameters for drive's control

Menu **„Holding Registers”** with number **37** (Hex **25**) allows access to parameters for control of the drive through series channel. The parameters, included in this menu are:

- command word by position control (index of parameter – 00)
- position reference (index of parameter – 01)

Parameters from menu “Holding Registers” are read-write (for reading and writing)

Examples: For reference the speed (output frequency) of the drive, we use parameters:

A.00 („Reference for frequency – integer part “) and / or
A.01 („Reference for frequency – fraction part “)

Both parameters belong to **Menu 0** (A) - „**Control“**,therefore the most significant bite of their addresses is 0 – hexadecimal **0x00**. The first parameter has **index 0** in Menu 0, the second – **index 1**. Accordingly the least significant bite of address of the first parameter will be 1(**0x00**), and of the second – 2(**0x01**).

The hexadecimal full two bite address will be:

- for parameter **A.00** – **0x0000**
- for parameter **A.01** – **0x0001**

For configuring a timer during start of DC-brake, it is used parameter **q.04**, принадлежащ на **Menu 14(q)** - „**Configuring of DC-brake**“.The indexes of the menu and of the parameter are accordingly **14** and **4** – hexadecimal **0x0E** and **0x04**. Hexadecimal two bite address of parameter **q.04** will be **0x0E04**.

10.6 Reading of parameters for visualization through series port

As it was indicated, the value of each parameter for visualization can be extracted either from **Menu 1(b)** - „**Visualization“** by pair parameters index/value or directly – from specialized **Menu 32** -„**Display**”. We will examine both options for reading the visualization parameters.

Example: We want to receive the running value of output frequency of inverter

- From description of **Menu 1(b)** - „**Visualization“**it is seen, that the output frequency is visualized by parameter **b.1** if index (parameter **b.0**) has value **3**. The index of menu for visualization (**0x01**), and indexes of parameters accordingly 0 (**0x00**) and 1 (**0x01**). Both parameters of **Menu 1(b)** are with addresses **0x0100** and **0x0101** accordingly. To receive the value of output frequency, we write the number **3** in parameter with address 0x0100, after which we read the desired value of parameter with address 0x0101.

- Direct reading through menu **32** -„**Display**” becomes as in the most significant bite of the address is written the index of menu 32 (**0x20**), in least significant – index of parameter, corresponding to output frequency - **0x03**. The desired value of output frequency is red directly from parameter with address **0x2003**.

10.7 Operation with specialized menu for control of the drive

As it was indicated in (**9.5**), **Menu 37** - „**Holding Registers**" allows access to parameters for control of the drive through series communication channel. These are parameters, which are not accessible from the control panel, as they are intended for control only through programmable controller or other external device.

Example: We want to supply position reference (menu **37**, parameter **1**)
The necessary address is with most significant bite 37 (**0x25**) and least significant bite 1(**0x01**).
The position reference is written on address **0x2501**.

10.8 Format of drive's parameters and variables, accessible by MODBUS

The values which are red or are written in configuration parameters by the use of MODBUS, are 16-bit binary numbers, which interpretation is defined from two types of parameters (integer or real number, with or without sign), as well as from the place of the decimal point (for real numbers).

For correct interpretation of the values of parameters during reading and for their correct setting during writing, it is necessary to be known the type of each single parameter. This can be seen from the last two columns on the table with description of menus and parameters, where are shown the range (minimal – maximal value) and default value for corresponding parameter.

The integers are presented without decimal point.
For example for parameter **A.00** („Reference for frequency – integer part ")the range of tolerance in the corresponding column is „0–400" - from here it is seen, that the parameter is integer.

The position of decimal point for the real numbers is indicated by the number of digits, written after the decimal point in the last two columns.

From the column with the range of tolerance it can be seen if the parameter is number with or without sign. Almost all parameters are numbers without sign (positive) – as indicated in above examples. Some parameters accept negative values, for example parameter **g.03** („Nulling the analog input ")with range „-32767 - +32767"

- **Presenting of integers**
  The integers are presented in binary format "with addition to 2".
  Example:
  number „ +1 "is presented (in hexadecimal form) as 0x0001,
  number „ - 1 " - as 0xFFFF.

- **Presenting of real numbers**
  The real numbers are presented as integers, which value is equal to corresponding real number, multiplied with 10 on power, equal to the number of digits after decimal point.

11 Technical maintenance

11.1 Electronic protection of inverter

Description of inverter protections
The inverter has built-in set of protections, protecting the power unit as well as the motor.

***Note*:** Writing of number, not described in the table below, doesn't mean that the service protections switch-on, and it is necessary immediate contact with the producer!

Table 11.1. Protection description

No:	Code:	Protection description:
0	**OSF**	Protection from higher grid voltage
1	**USF**	Protection from lower grid voltage
2	**OC**	Protection from short circuits in the motor
3	**hII**	Over current in the inverter > 240 % from Inom, detected from software
4	**OH**	Protection from overheating of the inverter
5	**OL**	Protection from overloading of the motor - I2t protection
6	**Enc**	Loss of the speed feedback Foutput- Ffb>10 [Hz]
7	**CFG**	Configuration mistake (reference of incompatible values of parameters of the inverter)
8	**Con**	Interruption of communication (by drive's control through series port)
9	**Out**	Interruption of phase between inverter output and motor (operates only by **U/f** mode)
10	**Err**	Mistake of specialized program for drive's control (if such one is activated)

Table 11.2. Protections, which can be recovered endless times

Protection:	Possible reason:	Action:
USF –low grid voltage	- to low voltage from the grid - momentary drop of the grid	- check the grid voltage and type of inverter - restart the inverter
OL - overload of motor	- not dimensioned motor/or load - bad adjustment of I2t protection	- check motor type and its load - check adjustment of I2t protection
OH – overheating of inverter	- bad cooling, dusted inverter	- check the cooling, secure additional ventilation if necessary
Enc - loss of speed feedback	- interruption or short circuit in the feedback, damage in encoder	- check the connection and encoder functionality

Table 11.3. Protections, which can recover limited times

Protection:	Possible reason:	Action:
OSF - increased grid voltage	- too high grid voltage electrical disturbances in the grid - too fast stop of the motor with big inertia	Increase the stopping time, add external brake resistor. Check the grid voltage and inverter type.
OC, **hII** - short circuit	- Short circuit in the motor or on inverter outputs, damage in the motor, or mistake in inverter adjustments	Check the connections of motor with the inverter, check the adjustments Acc, pbl of inverter. Possible motor phase loss.

Restoration of ready condition (**rdY)** can be done by switch-off the power supply (wait until display extinguishes) and secondary switch-on. If after next start the protection is activated again, it is necessary the inverter to be returned for repair.

12 EC Declaration of conformity

ДЕКЛАРАЦИЯ ЗА СЪОТВЕТСТВИЕ

Долуподписаният, **"ЕЛЕКТРОИНВЕНТ" ООД**
гр. София, 1407
бул. "Черни връх" № 43
телефон: (+359 2) 868 70 65, факс: (+359 2) 962 52 63

декларирам на собствена отговорност, че:

Продуктът: "Инвертор за управление на асинхронни ел. двигатели "
с търговска марка ELDI

е конструиран и произведен, съгласно установената инженерна практика по отношение на безопасността в съответствие с приложимите към него съществени изисквания на:

Директива 2006/95/ЕС, въведена с "Наредба за съществените изисквания и оценяване на съответствието на електрически съоръжения, предназначени за използване в определени граници на напрежението",

и

по отношение на електромагнитната съвместимост в съответствие със съществените изисквания на *Директива 2004/108/ЕС, въведена с "Наредба за съществените изисквания и оценяване на съответствието за електромагнитна съвместимост"* ,

като са изпълнени изискванията съответно на следните български стандарти, въвеждащи хармонизирани европейски стандарти:

БДС EN 50178:2003 (EN 50178:1997)

и

БДС EN 61800-3:2003 и БДС EN 55011+A1:2003

При правилното му монтиране, поддържане и използване по предназначение по начин указан в придружаващата го инструкция не застрашава живота и здравето на хората, безопасността на домашните животни, интересите на потребителите и опазването на околната среда и вещите.

Декларирам, че ми е известна отговорността, която нося съгласно чл. 313 от НК

гр. София
28.01.2010 год

Управител:
/ инж. Юлиян Горчанов /

ЕЛЕКТРОИНВЕНТ ООД София

Figure 12.1 EC – Declaration of conformity

Contacts

Office

electroinvent
Economic Zone – Bozhurishte,
6 Valery Petrov str., POB 23,
2227 Bozhurishte, Bulgaria

Tel.: +(359 2) 862 14 06; 868 70 65
Fax: +(359 2) 962 52 63
E-Mail: office@elinvent.com
Web site: http://www.electroinvent.com/