Installation and User Manual

for Photovoltaic Smart String Box - Passive (with manual switch)

SSB-P-10-100 / SSB-P-15-150 / SSB-P-20-200 / SSB-P-25-250 / SSB-P-30-300

Manual 50608
(Revision B1)

Contents

1 Introduction 4
1.1 Disclaimer 4
1.2 IMPORTANT SAFETY INSTRUCTIONS 4
1.3 Scope of Delivery 5
1.4 Type Label 5
2 Warnings and Notes 6
3 Installation 7
3.1 Fuse Selection 8
3.2 Location Selection 8
3.3 Mechanical Installation 9
3.4 Opening the SSB-P 9
3.5 Turning Off the SSB-P 10
3.6 Electrical Installation 11
3.6.1 Overview of the Electrical Connections 12
3.6.2 Overview of the Cable Glands 13
3.6.3 Schematic Example of a PV installation with SSB-Ps 13
3.6.4 Power connections to the inverter 13
3.6.5 Communication Connections for Multi-String Monitoring (MSM) 15
3.6.6 PV strings connections 16
4 Commissioning 18
4.1 String Box Communication Configuration 18
4.2 Turning On the SSB-P 18
4.3 Turning Off the SSB-P 19
5 Replacing defective fuse links and surge arresters 20
5.1.1 Replacing a Fuse 20
5.1.2 Changing a Surge Arrester 21
6 EC – Declaration of Conformity 22
7 Data Sheet SSB-P 23

1 Introduction

This high-quality ELECTROINVENT photovoltaic string box is intended to connect up to 30 PV module strings (depending on the type). The box is also used to disconnect the DC from the inverter. The Smart String Box (SSB) measures the current of each string and sends data to the inverter. This feature is essential for diagnostics and maintenance of PV-panels and cabling.

The SSB-P is powered directly by the PV strings.

1.1 Disclaimer

ELECTROINVENT delivers optimized tested equipment such as inverters and string boxes for Photovoltaic Power Plants. The correct integration and interconnection of the equipment must be made according to the manuals and datasheets of ELECTROINVENT and is the responsibility of the System Integrator. ELECTROINVENT does not accept liability for system design, dimensioning of system related parts, installation or the performance of the system.

The content of this manual is regularly reviewed for compliance with the hardware and software operation and any corrections are included in later editions. Every effort is made to ensure the details in this manual are accurate. Warranty claims will not be accepted in case of violation of the installation instructions and we do not accept liability in case of accidents caused by inappropriate handling or work performed by unauthorized personnel which results in personal injury or damage to devices, or any other subsequent damages.

1.2 IMPORTANT SAFETY INSTRUCTIONS

READ AND SAVE THESE INSTRUCTIONS!

This manual contains important safety and operating instructions for photovoltaic string box type SSB-P-XX-XXX. Keep it with or near the equipment at all times.

Photovoltaic installations operate with lethal voltages and the work described here should only be performed by authorized personnel familiar with the installation, mounting, commissioning, and the operation of PV installations. This manual must be fully read and understood before installing or commissioning is performed. The product must only be used for its intended purpose and unauthorized personnel are not allowed to open it. The faultless and safe operation of the product assumes appropriate transport, specialized storage, installation and mounting as well as correct operation and maintenance. The relevant regional and country-specific regulations and instructions must be obeyed as well as requirements described in this document including placement and installation instructions (e.g. connection profiles, torque settings, etc.)

Symbols and warning signs used:

WARNING

WARNING indicates a hazardous situation which, if not avoided, could result in death or serious injury.

NOTICE

NOTICE refers to address practices not related to personal injury. Failure to observe could lead to property damage.

1.3 Scope of Delivery

Table 1.1 Scope of delivery

Quantity	Article
1 pcs	Smart String Box SSB-P
1 pcs	Wall mounting kit (4 parts)
1 pcs	Angled screwdriver
2 pcs	Spare fuses for the strings
1 pcs	Spare fiber optic connector (if the default communication interface is used)

1.4 Type Label

The type label with the product identification is located on the inner left side of the box.

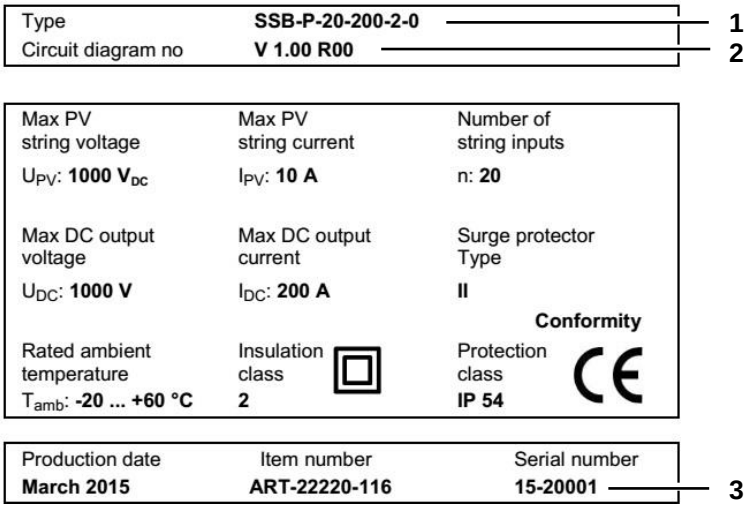

Figure 1.1 SSB-P type label

1 - Product identification (see also Figure 1.2)
2 - Valid electrical circuit diagram
3 - Serial number of the string box

The product identification (type code) [*Figure 1.1-1*] description is shown in *Figure 1.2.*

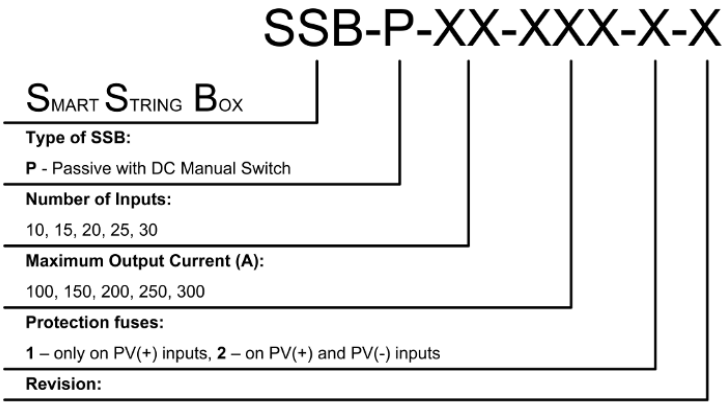

Figure 1.2 Product identification description (see Figure 1.1-1)

2 Warnings and Notes

WARNING

The local installation standards must be obeyed.

WARNING

The device must only be installed, operated and maintained by qualified personnel.

WARNING

The device carries lethal voltages!

The PV module strings can be live even when the string box's switch is turned off and the string protections are removed.

WARNING

The DC line toward the inverter can be live even when the string box's switch is turned off. Consider the inverter capacitors discharge time of **10 minutes**!

WARNING

The string box is a part of an entire PV installation. Consider all safety instructions displayed on the string box and on all the equipment connected to it and in the installation and user manuals! Beware that an automatic restart can follow a grid or photovoltaic voltage failure.

WARNING

If any information is unclear, please refer to ELECTROINVENT Service Centre.

NOTICE

Loss of warranty.

The box must not be damaged and no holes are allowed to be drilled in the cabinet. Any transport damage must be reported to ELECTROINVENT.

3 Installation

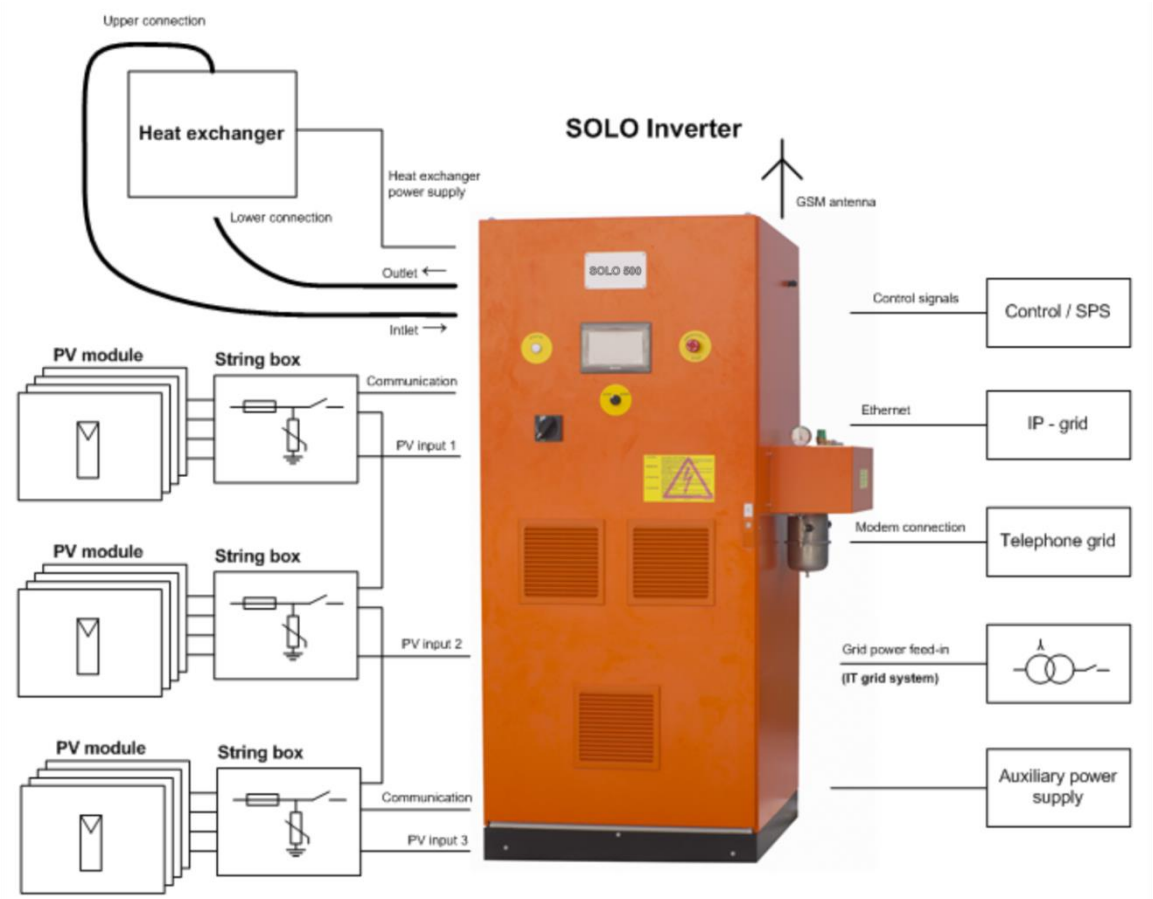

Figure 3.1 Example view of a photovoltaic installation with SOLO inverter, smart string boxes and grid transformer

A different number of PV strings can be connected depending on the string box model. The positive poles of the separate power feeds are protected individually, while the fuses on the negative poles are optional. The type of the fuses must correspond to the maximum PV module string current.

The separate string currents are brought together through coupling joints and the manual switch toward the two DC output terminals. The PV string currents are monitored and the data is sent to the inverter via serial interface (the default fiber optical or the optional RS485).

If an overvoltage occurs the accruing energy is discharged thorough a surge arrester.

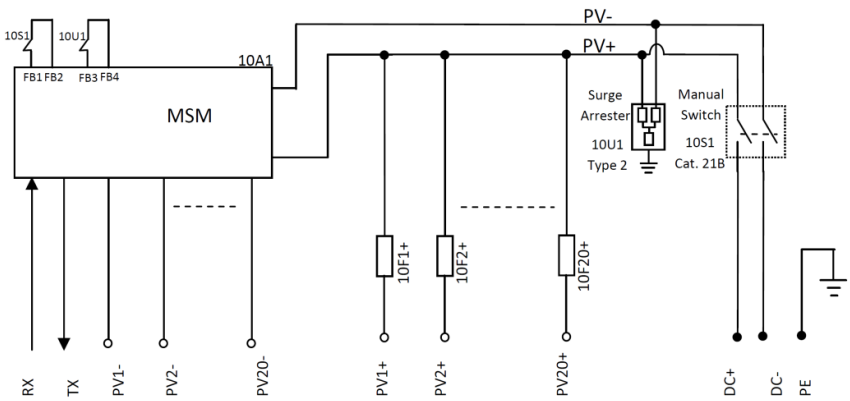

Figure 3.2 Circuit diagram of SSB-P-20-200-1-0 (Example of an SSB-P with fuses on PV (+) inputs only)

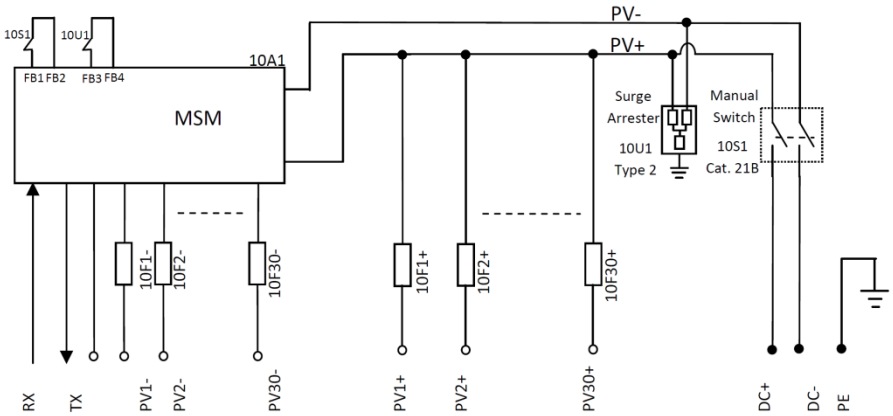

Figure 3.3 Circuit diagram of SSB-P-30-300-2-0 (Example of an SSB-P with fuses on PV (+) and PV (-) inputs)

Note: Check the circuit diagram of your model on the inner right side of the SSB-P.

3.1 Fuse Selection

The fuses have to be selected according to *Table 3.1* following the rule:

- Rated current of the fuse must be higher or equal than: 1.6 x I_{SC} at standard conditions (STC) (I_{SC} – short circuit current of panel).

Table 3.1 Fuse selection

I_{SC}: short circuit current of panel at STC [A]	**Rated current of the fuse [A]**	**Size [mm]**	**Pre-arching Joule integral [A^2s] L/R=2ms**	**Operating Joule integral [A^2s] L/R=2ms**
≤ 2 A	4 A	10x38	3.3	28
≤ 3 A	6 A		5.5	45
≤ 5 A	8 A		8	62
≤ 6 A	10 A		11	88
≤ 8 A	12 A		23	180
≤ 10 A	16 A		35	270

Note: The fuses are factory pre-installed according to the client's requirements (for specified current).

3.2 Location Selection

- The SSB-P is suitable for outdoor installation.
- The SSB-P should be positioned as close as possible to the PV modules.
- The string box must be easily accessible for operation and maintenance.
- A location without direct sun irradiation should be chosen.
- The string box should be mounted in a way, minimizing or preventing collection of water and dirt and growth of moss.

3.3 Mechanical Installation

The string box must be mounted vertically on a wall or on a stand, with the cable glands [*Figure 3.4*] on the bottom side, using the supplied fitting materials where possible. No liquid (water, oil, etc.) should ever enter into the cabinet, not even during installation.

Check the dimensions of your model in the datasheet (last chapter of this manual).

Note: The two climate valves [*Figure 3.4*] must not be covered. They ensure the air circulation inside the SSB-P.

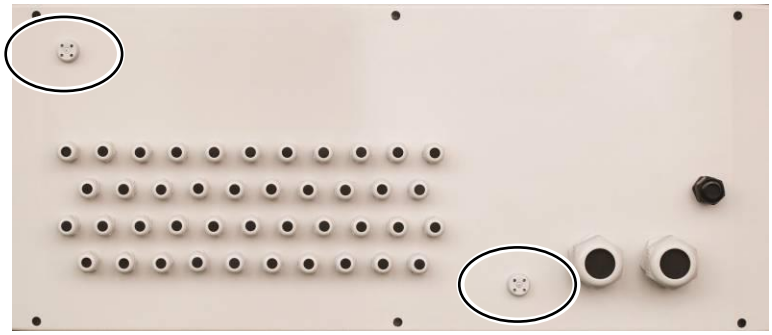

Figure 3.4 Climate valves of the SSB-P (bottom view)

3.4 Opening the SSB-P

WARNING

Opening of the string box must only be performed by authorized personnel. The absence of voltages (PV lines and DC side) must be ensured at all times.

The SSB-P door is closed by means of its handle.

Opening the door is done by pulling and swiveling the handle to the right (see *Figure 3.5*).

Figure 3.5 SSB-P opening

3.5 Turning Off the SSB-P

WARNING

Potentially Lethal Voltage!

Even if the manual switch is turned off the PV lines and the DC side might have lethal voltage.

NOTICE

It is recommended that first the inverter should be turned off before carrying out the following activities (string box not being on load).

Open the door of the SSB-P and set the manual switch to “OFF” position [*Figure 3.6*].

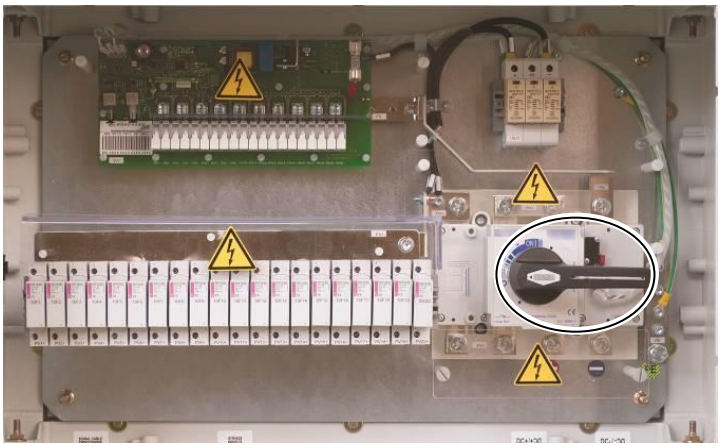

Figure 3.6 Manual switch of the SSB-P

3.6 Electrical Installation

WARNING

The installation of the string box must only be performed by authorized personnel. The absence of voltages (PV and DC lines) must be ensured at all times.

WARNING

The device carries lethal voltages!

The PV module strings can be live even when the string box's switch is turned off and the string protections are removed.

WARNING

The DC line toward the inverter can be live even when the string box's switch is turned off. Consider the inverter capacitors discharge time of **10 minutes**!

NOTICE

The communication lines must be mounted in a way that won't allow them to be damaged by rodents.

NOTICE

The electrical lines must not come in contact with flammable materials.

3.6.1 Overview of the Electrical Connections

The locations of the electrical connections are shown in *Figure 3.7 and Figure 3.8*

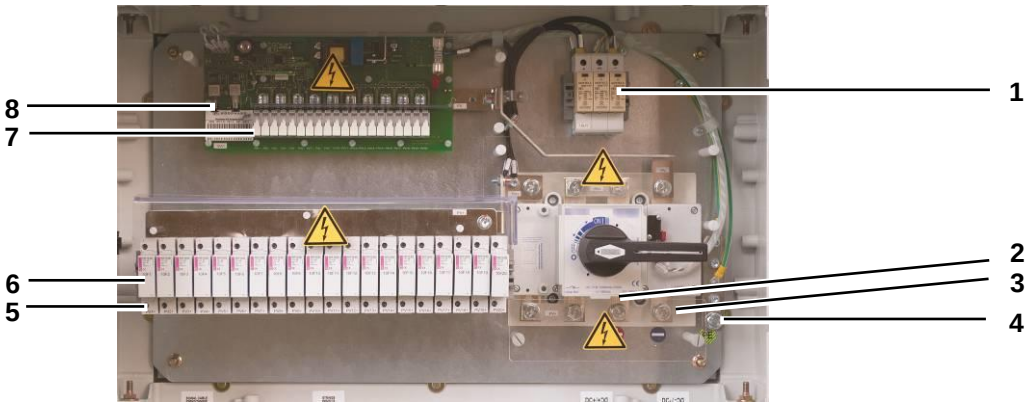

Figure 3.7 Location of the electrical connections in the SSB-P-20-200-1-0
(Example of an SSB-P with fuses on PV (+) inputs only)

.

1 - Overvoltage protection
2 - DC (+) output busbar
3 - DC (-) output busbar
4 - PE
5 - PV (+) string input terminals
6 - Fuse holders
7 - PV (-) string input terminals
8 - Communication interface (fiber optic)

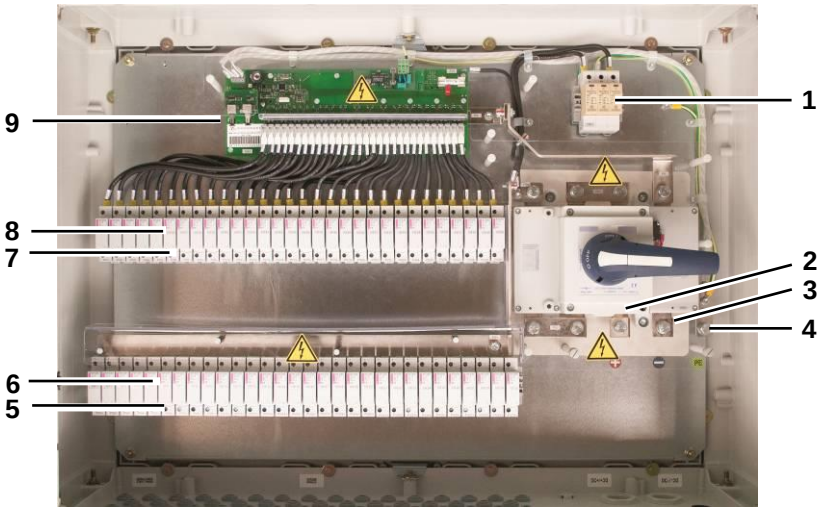

Figure 3.8 Location of the electrical connections in the SSB-P-30-300-2-0
(Example of an SSB-P with fuses on PV (+) and PV (-) inputs)

1 - Overvoltage protection
2 - DC (+) output busbar
3 - DC (-) output busbar
4 - PE
5 - PV (+) string input terminals
6 - Fuse holders PV (+)
7 - PV (-) string input terminals
8 - Fuse holders PV (-)
9 - Communication interface (fiber optic)

3.6.2 Overview of the Cable Glands

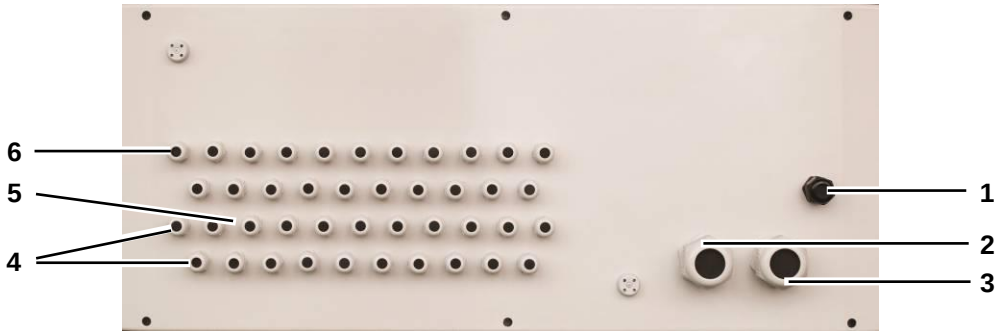

Figure 3.9 SSB-P cable glands (exterior bottom view)

1 - PE
2 - DC (+) output
3 - DC (-) output
4 - Communication interfaces
5 - PV (-) strings inputs
6 - PV (+) strings inputs

Note: *See the labels on the inside.*

3.6.3 Schematic Example of a PV installation with SSB-Ps

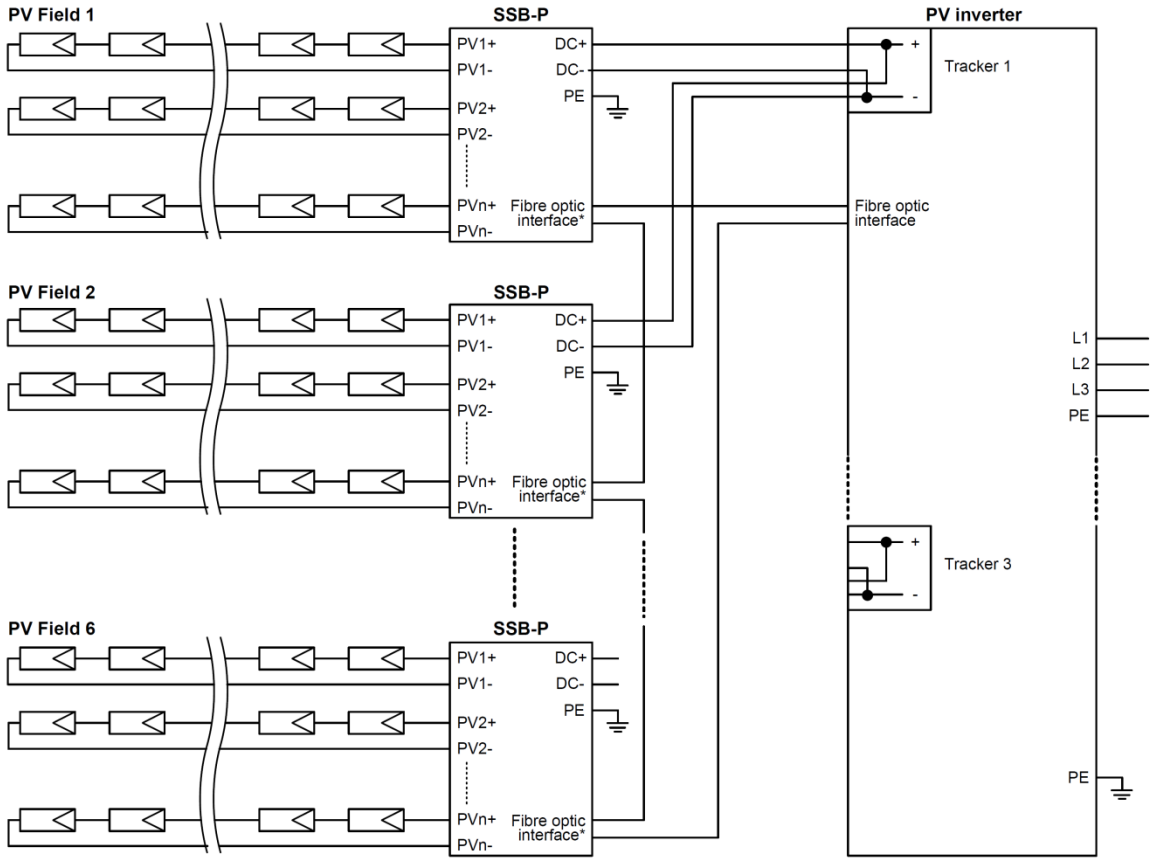

Figure 3.10 Schematic example of a PV installation with Smart String Boxes SSB-P

3.6.4 Power connections to the inverter

1. Open the string box door (see *Chapter 3.4*).
2. Turn the manual switch off (see *Chapter 3.5*).
3. Loosen the two screws [*Figure 3.11-4*] completely and remove the protective transparent plate.

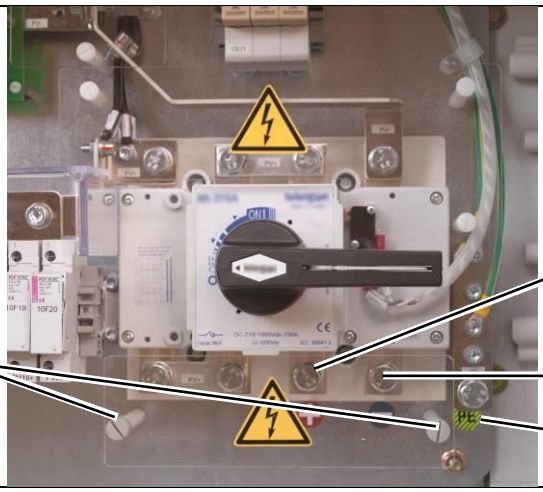

Figure 3.11 Power connections of SSB-P

1 - DC (+) output busbar
2 - DC (-) output busbar
3 - PE
4 - Screws of the protective transparent plate

4. First, connect the grounding cable (PE) to the corresponding screw terminal [*Figure 3.11-3*] using a cable lug.
5. Then, execute the power connections to the inverter following the sequence in *Table 3.2* using cable lugs. Observe the corresponding screw terminals (see *Figure 3.11-2* and *-1*).

Table 3.2 Power connections to the inverter (see Figure 3.11)

Terminal	Function	Specifications	
PE	Grounding	Connection type: Fastening torque: Cable gland:	M10 18 Nm 7…13 mm
DC-	Negative pole	Connection type: Fastening torque: Cable gland:	M10 18 Nm 22…32 mm
DC+	Positive pole		

6. Mount back the protective transparent plate.

3.6.5 Communication Connections for Multi-String Monitoring (MSM)

NOTICE

Make sure that the sequence is followed and the PV strings are not connected.

The string box monitoring communication can be done using the fiber optic interface (default) or RS485 (optional).

The fiber optic interface [*Figure 3.12*] requires a ring topology between the inverter and the string boxes. Starting from the inverter the ring has to be connected from string box to string box and ending back to the inverter.

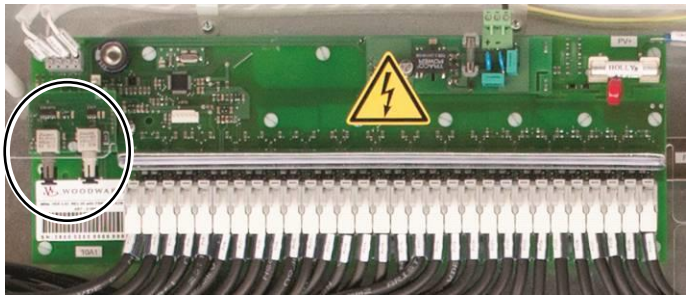

Figure 3.12 Glass fiber transmitter and receiver on MSM board
(default communication interface)

Table 3.3 Serial glass fiber optic interface specification

Terminal	Function	Specification	
TX	Fiber optic Transmit data (output)	Cable type:	Outdoor, UV light resistant, armored
RX	Fiber optic Receive data (input)	Fiber type:	Multimode 62,5/125 or 50/125 Cable end port ST type
		Recommended:	A-VQ(BN)H 1x4, Corning Cable Systems
		Cable gland:	4.5…10 mm

Note: Instead of glass fiber optic, RS485 [*Figure 3.13*] interface is available on request.

Table 3.4 RS485 serial interface

Terminal	Function	Specification	
RS485	B, A, GND	Cable type:	Outdoor, UV light resistant
		Separable screw terminals	
		Cu-cross section:	0.5 … 1 mm^2
		Recommended:	UNITRONIC® Li2YCYv(TP) 2x2x0,5 or 3x2x0,5, Lapp Kabel
		Cable gland:	4.5…10 mm

Note: The optional RS485 has to be realized as a bus terminating in the last string box with the termination resistance (shift the white switches [*Figure 3.13-1*] to “ON” position).

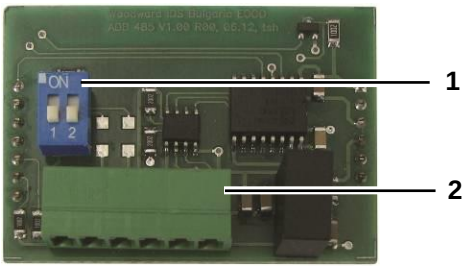

Figure 3.13 RS485 communication interface (optional)

1 On/Off termination resistance activation
2 RS485 connections

3.6.6 PV strings connections

NOTICE

Respect the correct PV polarity. Wrong polarity of the PV inputs might cause damage to the string box and the PV modules.

NOTICE

Never feed a DC inlet with voltages higher than 1000V. Higher voltages lead to box damage. Improper operation of string box may lead to the warranty being void, and no liability for consequential damages will be undertaken.

WARNING

In case of wrong poled strings, never break the current flow by removing the fuses from the fuse holders.

WARNING

A fuse holder must only be opened if no current is flowing.

The PV strings connections have to be performed according to the following sequence:

1. Remove the fuses out of the fuse holders [*Figure 3.7-6 or Figure 3.8-6 and -8*]
2. Connect the PV string cables according to *Table 3.5* and *Table 3.6.*

NOTICE

The connection points of user contact clamping spring-cage terminals (*Table 3.5*) are opened and closed using the supplied angled screwdriver *(see Figure 3.14 and Figure 3.15)*.

After the conductor has been inserted into the terminal compartment, it automatically makes contact.

Figure 3.14 Opening a clamping spring-cage terminal for PV (-) string connection without fuse protection

Figure 3.15 Closing a clamping spring-cage terminal for PV(-) string connection without fuse protection

Table 3.5 PV (-) strings connections without fuse protections (see Figure 3.7-7)

Terminal	Function	Specifications
PV1- … PV30-	PV1(-) … 30(-) (negative pole)	Clamping spring-cage terminals: 1.5 …16 mm^2 Cable gland: 4.5…10 mm

Note: If the model of the SSB-P includes fuse protections on the negative poles, then the terminals specification is the same as for the positive poles (*Table 3.6*). Observe the terminals labeling!

Table 3.6 PV (+) strings connections (see Figure 3.7-5)

Terminal	Function	Specifications
PV1+ … PV30+	PV1(+) … PV30(+) (positive pole)	Fastening torque nominal/maximal: 1.5/1.8 Nm Cu-cross section: 0.5 …10 mm^2 Cable gland: 4.5…10 mm

3. Measure the string voltage and check the polarity.

4. Insert the fuses again.

4 Commissioning

4.1 String Box Communication Configuration

Each SSB-P has a unique 16-bit address which is the S/N of the MSM unit [*Figure 4.1-2*]. The addresses of the SSB-Ps are configured on the VCU of the inverter. For more information see the *Installation and User Manual* of the SOLO inverter.

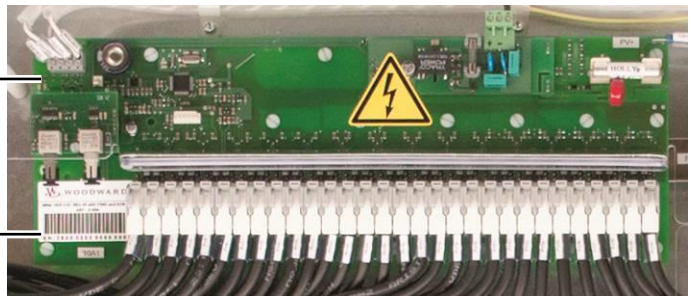

Figure 4.1 MSM unit

1 - LED indicators
2 - SSB-P address

Check the two LEDs on the MSM unit [*Figure 4.1-1*]:

- The green (left) one shows power supply presence.
- The red (right) one shows communication status. This LED is blinking during transmission.

Note: Each box issues an automatic identification message on the bus if there is not a single request to that box in a time range of 2-3 min.

Communication bus fault detection in a ring network: The nodes before the fault receive requests and send responses – their red LEDs are blinking more frequently than those of the nodes after the fault as they do not receive requests but only transmit automatic identification messages every 2-3 min.

4.2 Turning On the SSB-P

Make sure that the PV (+), PV (-), DC (+), DC (-), PE and communication cables are correctly installed.

Check if the fuse links are rated for the correct current. The fuse rating must comply with the rules defined in *Chapter 3.1*.

NOTICE

Wrong rated fuse link can lead to damages both to the SOLO String Box and the PV strings.

WARNING

Potentially Lethal Voltage!

Assure that the four protective transparent plates against direct contact are mounted before proceeding with the commissioning.

When the PV modules, power cables, ground and communication lines in the PV installation are connected correctly, the string box is ready for operation.

NOTICE

Observe the instructions supplied in the user manual accompanying your photovoltaic inverter.

To connect the PV modules to the photovoltaic inverter, turn the manual switch on, and then close the door of the SSB-P.

NOTICE

The door must be closed properly in order to prevent the penetration of dust and humidity.

NOTICE

Contaminations on the rubber seal must be avoided. Damaged rubber seals must be replaced immediately.

4.3 Turning Off the SSB-P

In order to separate the PV modules from the inverter, first turn the inverter off, then open the string box and set the manual switch to “OFF” position.

NOTICE

Observe the instructions supplied in the user manual accompanying your photovoltaic inverter.

5 Replacing defective fuse links and surge arresters

WARNING

The works described below must only be performed by electricians trained for PV installation.

WARNING

The device carries lethal voltages!

The PV module strings can be live even when the string box's switch is turned off and the string protections are removed.

WARNING

The DC line toward the inverter can be live even when the string box's switch is turned off. Consider the inverter capacitors discharge time of **10 minutes**!

NOTICE

Use only fuses intended for use in photovoltaic applications. Otherwise, the protection of the installation will no longer be secured.

5.1.1 Replacing a Fuse

NOTICE

Observe the instructions in the user manual accompanying your photovoltaic inverter.

1. Check on the inverter VCU or in the Web portal which string is not producing current. This can be an indication of a damaged fuse.
2. Open the string box door (see *Chapter 3.4*).
3. Turn the manual switch off (see *Chapter 3.5*).
4. Pull the string fuse holder out (see *Figure 5.1*)

Figure 5.1 Fuse link opened

5. Replace the fuse link with the correct rated one complying with the rules defined in *Chapter 3.1*.

NOTICE

A wrong rated fuse link can lead to damages both to the SOLO String Box and the PV strings.

6. Close the string fuse holder.
7. Turn the manual switch on. The string is in operation again.
8. Close the string box door.

5.1.2 Changing a Surge Arrester

The green indicator of the surge arrester (10U1) changes its colour to red when it is tripped (also visible via communication interface).

Figure 5.2 Surge arrester (see also Figure 3.7-1)

The surge arrester is monitored by auxiliary potential free contacts.

1. Open the SOLO String Box door (see *Chapter 3.4*).
2. Turn the manual switch off (see *Chapter 3.5*).
3. Remove the defective surge arrester(s) by pulling it out of the fuse holder and place a new one (see *Figure 5.3*).

Figure 5.3 Removing a damaged surge arrester

4. Turn the manual switch on.
5. Close the string box door.

6 EC – Declaration of Conformity

EC – Declaration of Conformity

Manufacturer

Electroinvent LTD
43, Cherny Vrah Blvd.
1407 Sofia
Bulgaria

This declaration of conformity relates to string boxes:

SSB-P-15-150-2-0
SSB-P-20-200-2-0
SSB-P-25-250-2-0

The above described product is constructed and manufactured according to the good engineering practice in safety matters in compliance with the essential requirements of:

Directive 2006/95/EC of the European Parliament and of The Council of 12 December 2006 on the harmonization of the laws of Member States relating to electrical equipment designed for use within certain voltage limits

and regarding electromagnetic compatibility in compliance with the essential applicable requirements of:

Directive 2004/108/EC of the European Parliament and of the Council of 15 December 2004 on the approximation of the laws of the Member States relating to electromagnetic compatibility

meeting accordingly the requirements of the following harmonized European standards:

EN 61000-6-2	Electromagnetic compatibility (EMC) Part 6-2: Generic standards - Immunity for industrial environments (IEC 61000-6-2:2005)
EN 61000-6-4	Electromagnetic compatibility (EMC) Part 6-4: Generic standards - Emission standard for industrial environments (IEC 61000-6-4:2006)
EN 50178	Electronic equipment for use in power installations; EN 50178:1997
Issued by	J. Torchanov, CEO, Electroinvent LTD

This declaration confirms the compliance with the quoted directive, but it does not constitute any warranty as to properties.
The safety information contained in the product documentation supplied must be adhered to.

Sofia, 09.04.2015

.....

J. Torchanov, Electroinvent LTD

EI / jt

CE Conformity SSB-P

Figure 6.1 EC – Declaration of Conformity

7 Data Sheet SSB-P

SSB-P Type		10-100	15-150	20-200	25-250	30-300

Electrical Data

Maximum operating voltage	U_{DC}	1000 V_{DC}				
Fuses		PV(+) or PV(+) and PV(-)				
Maximum output DC current	I_{DCmax}	100 A	150 A	200 A	250 A	300 A
Maximum number PV inputs (strings)		10	15	20	25	30
Maximum input DC current per string	I_{STRmax}	10 A				
String current measurement range	I_{STR}	0 A to 10 A				
Reverse string current measuring	$I_{STR\ rev}$	Yes				
Surge arrester		Type II				
Test voltage		2.5 kV, 50 Hz, 1 min				
Power supply		Directly from PV strings 300 V_{DC} (starting voltage) / 100-1200 V_{DC} (operating voltage)				
Maximum power consumption		5 W				

Mechanical Data

Dimensions		See on next page				
Weight with fuses PV+ only with fuses PV+ and PV-		28 kg 30 kg	29 kg 35 kg	30 kg 36 kg	47 kg 49 kg	49 kg 51 kg
Colour		RAL 7035 (light grey)				
Enclosure material		Glass-fiber-reinforced and halogen-free polyester				
Protection class according to EN 60529		IP54 (outdoor)				
Impact strength according to EN 62262		IK10				
Maximum air humidity		95 %				
Ambient temperature range	T_{amb}	–20 °C ... +60 °C				
UV proof		Yes				

Monitor Interface

Type	Multi-string monitor (MSM)
Status feedback (reverse current, manual switch on/off, surge arrester fault indication)	Yes, via communication interface
String current monitoring	Yes, via communication interface
String voltage monitoring	Yes, via communication interface
Box temperature monitoring	Yes, via communication interface

Communication Interface

Fiber optical interface (default)	Ring type serial interface connection
RS 485 serial interface (optional)	Separable screw terminal with 6 pins for easy bus wiring. Galvanically isolated from monitoring electronic.

Standards

CE conformity / EMC	Yes / EN 61000-6-2, EN 61000-6-4 / EN 50178

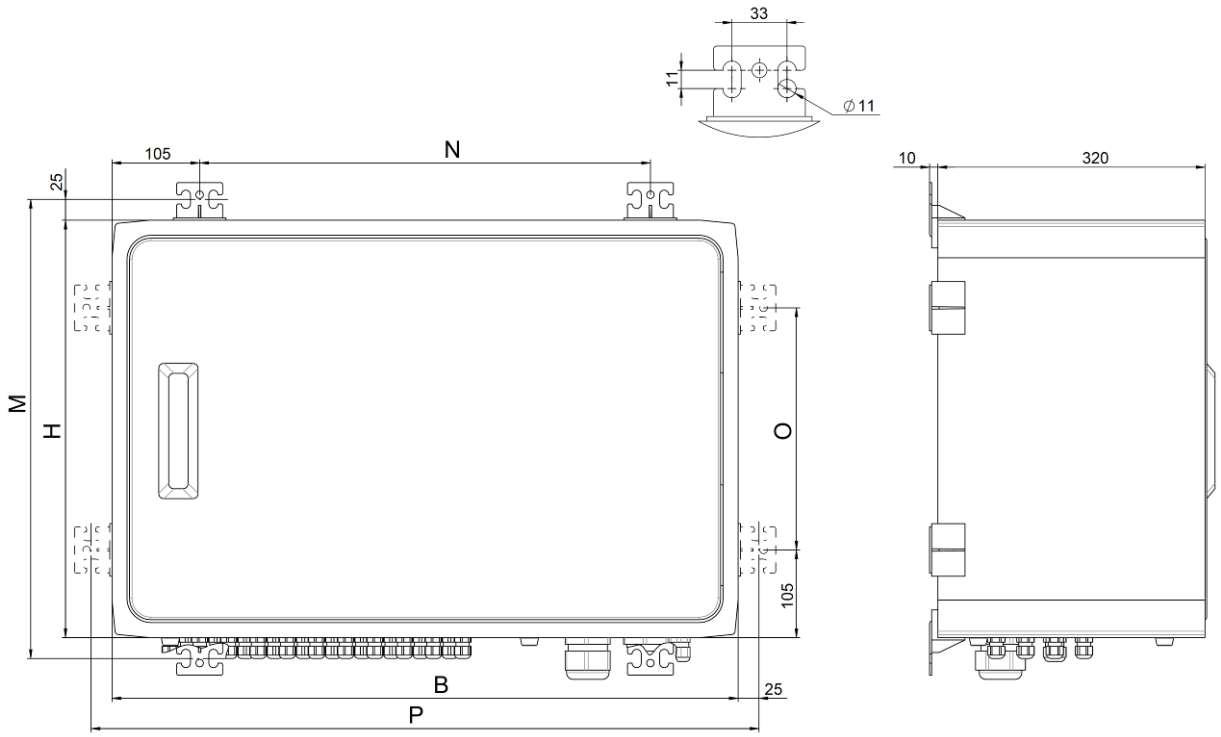

Available versions

SSB-P Type	Fuses	Dimensions					
		B	H	N	M	P	O
SSB-P-10-100-1	PV(+)	750 mm	500 mm	540 mm	550 mm	800 mm	290 mm
SSB-P-10-100-2	PV(+) and PV(-)	750 mm	500 mm	540 mm	550 mm	800 mm	290 mm
SSB-P-15-150-1	PV(+)	750 mm	500 mm	540 mm	550 mm	800 mm	290 mm
SSB-P-15-150-2	PV(+) and PV(-)	750 mm	750 mm	540 mm	800 mm	800 mm	540 mm
SSB-P-20-200-1	PV(+)	750 mm	500 mm	540 mm	550 mm	800 mm	290 mm
SSB-P-20-200-2	PV(+) and PV(-)	750 mm	750 mm	540 mm	800 mm	800 mm	540 mm
SSB-P-25-250-1	PV(+)	1000 mm	750 mm	790 mm	800 mm	1050 mm	540 mm
SSB-P-25-250-2	PV(+) and PV(-)	1000 mm	750 mm	790 mm	800 mm	1050 mm	540 mm
SSB-P-30-300-1	PV(+)	1000 mm	750 mm	790 mm	800 mm	1050 mm	540 mm
SSB-P-30-300-2	PV(+) and PV(-)	1000 mm	750 mm	790 mm	800 mm	1050 mm	540 mm

Ordering Information

For technical or commercial information please contact the ELECTROINVENT sales office (see Contacts on last page of this user manual).

Contacts

Office

electroinvent
Economic Zone - Bozhurishte,
6 Valeri Petrov str., POB 23,
2227 Bozhurishte, Bulgaria

Tel.: +(359 2) 862 14 06; 868 70 65
Fax: +(359 2) 962 52 63
E-Mail: office@elinvent.com
Web site: http://www.electroinvent.com/

Sales

electroinvent
Economic Zone - Bozhurishte,
6 Valeri Petrov str., POB 23,
2227 Bozhurishte, Bulgaria

Tel.: +(359 2) 862 14 06; 868 70 65
Fax: +(359 2) 962 52 63
E-Mail: sales@elinvent.com
Web site: http://www.electroinvent.com/

Service

electroinvent
Economic Zone - Bozhurishte,
6 Valeri Petrov str., POB 23,
2227 Bozhurishte, Bulgaria

Hot line: +(359) 894 66 11 37
E-Mail: service-request@elinvent.com
Web site: http://www.electroinvent.com/